MILLING



A - 34 | Inserts Overview

A - 52 | FACE MILLING
A - 80 | HIFEED MILLING
A - 110 | SHOULDER MILLING
A - 178 | PROFILE MILLING
A - 204 | HARDMILL

A - 209 | CENTER & CHAMFER
A - 212 | SPOT FACE
A - 214 | CARBIDE END MILLS

A - 236 | Spare Parts

A - 244 | Technical Data

1 - Define your operation type:

- Face milling
- Highfeed milling
- Shoulder milling
- Profile milling
- Hardmill

Select your tool:

See page A - 8

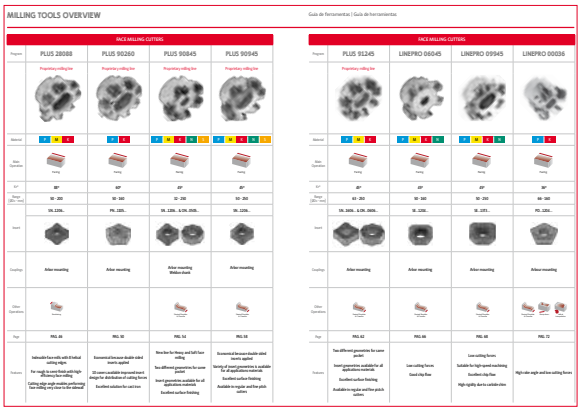

2 - Define your material according to ISO:

- P Steel
- M Stainless Steel
- K Cast Iron
- N Aluminium & Non Ferrous Materials
- S Heat Resistent and Titanium Alloy
- H Hardened Material

See the chapter General Technical Data on the last pages for Palbit Selection Materials - PSM

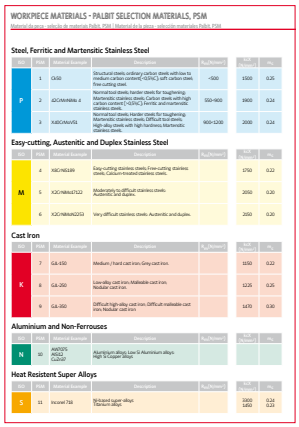

3 - Select your milling cutter.

Choose the cutter pitch and mounting:

- Use a close pitch cutter as first choice
- Use a coarse pitch cutter for long overhang and unstable conditions
- Choose a mouting type
- The cutter marked as “stock available under request” has a minimum order quantity according to the following table:

Qty	*IC Size
10	≤ 100 mm
5	> 100 mm

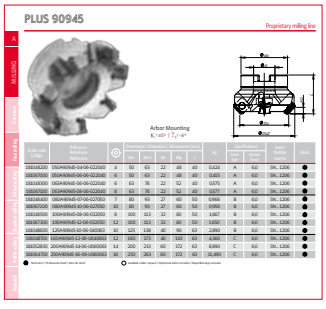

4 - Select your insert.

Choose the chip-breaker for your operation:

- Chip-breaker L= Light (for light cuts when low forces/power are required)
- Chip-breaker M = Medium (first choice for mixed production)
- Chip-breaker H = Heavy (for rough operations, forging, cast skin and vibration)
- Select insert grade for optimum productivity
- The insert marked as “stock available under request” has a minimum order quantity according to the following table:

Qty	*IC Size
300	≤ IC 25 mm
150	> IC 25 mm

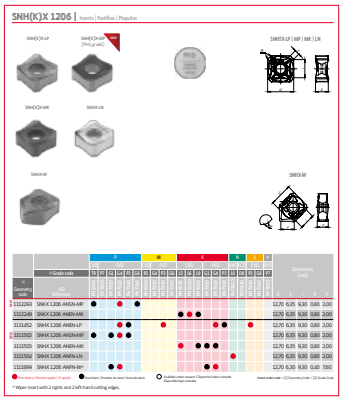

5 - Define your starting cutting parameters.

Cutting speeds and feeds for different materials are given on the insert boxes and in the tables for each solution.

The values should be optimized according to the machine and conditions.

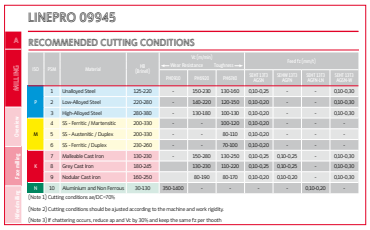

INSERTS CODIFICATION FOR MILLING HOLDERS

Codificação de pastilhas para fresas | Codificación de insertos para herramientas de fresado

Code	Inserts Description	Page	Code	Inserts Description	Page	Code	Inserts description	Page
000	PD...W 1204	78	200	XP... 0602	125	405	XDHW 10T310	201
060	SE...T/W 1204	72	201	XP.. 1003	132	410	XDHW 040110	201
062	SP...T/W 1204	162	202	XPET 1706	137	450	WNHU 060410	180
063	POKT 0403	81	245	RDHW 0702	195	490	WNHU 04T3...	111 | 178
064	SOEW 080310 S	85	250	RD...T/W 1003 MO	195	500	WNMW 1207	103
065	SPKT/W 08T308	107	251	RD...T/W 12T3MO	195	505	WDMW 1204	98
066	SOEW 13M510 S	89	252	RD...T/W 1604MO	195	720	XNHW 1205...	207
068	SOEW 160512 S	94	253	RD...T/W 2006MO	195	760	XDGX 15M5	153
083	VCGX 220530	160	280	SN...U 1206	53	770	XDGX 22M7	157
099	SE...T/W 13T3	75	335	RD...0802	185	900	LNXT 0904	142
150	ADKT 1505	175	336	RP...10T3	185	901	LNXT 1306	145
170	AP...T 1003	165	337	RP...1204	185	902	PN...X 1105	57
171	ANHX 1004	112	338	RP...1605	185	903	LNXT 1506	149
175	ANHX 1204	118	339	RP...2006	185	908	SN...X 1206 & ON...X 0505	61
180	AP... 1604	171	351	RN...1204	189	909	SN...X 1206	65
181	ANHX 1607	121	400	XDHW 060210	201	912	SN...X 1606 & ON...X 0606	69

COUPLING TYPES

Tipo de acoplamento | Tipo de acoplamiento

Symbol Símbolo Símblo	Coupling type Tipo de acoplamento Tipo de acoplamiento	Inserts fixation type Fixação de pastilhas Fijación de plaquitas	Standard Norma Norma
A	Arbor mounting Montagem tipo árvore Montaje tipo husillo	Insert screw Parafuso pastilha Tornillo de la plaquita	ISO 6462
B		Wedge Cunha Cuña	ISO 6462
C		Insert screw and washer, Screw clamp or clamp Parafuso para pastilha e anilha, parafuso e grampo ou grampo Tornillo de la plaquita y arandela, tornillo y brida o brida	ISO 6462
D		Washer Anilha Arandela	ISO 6462
E	Cylindrical shank Haste cilíndrica Mango recto	Any type Qualquer tipo Cualquier tipo	DIN 1835 - A
R	Threaded coupling Acoplamento roscado Acoplamiento tipo tornillo	Any type Qualquer tipo Cualquier tipo	Palbit internal standard Norma interna Palbit
W	Weldon shank Haste weldon tipo mango	Any type Qualquer tipo Cualquier tipo	DIN 1835 - B

ISO ARBOR MOUNTING TYPES | Estilos de montagem ISO tipo árvore | Estilos de montaje ISO tipo husillo

Arbor type A

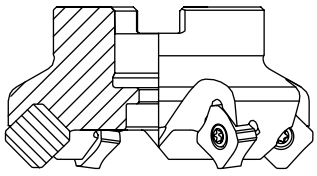

Arbor type B

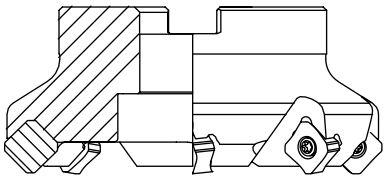

Arbor type C

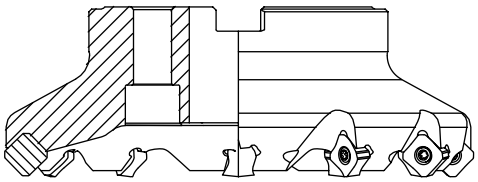

NOTE: For each type of arbor mounting (see previous table of coupling type on simbols A, B, C, D), we can have a different arbor types (see images above).

MILLING TOOLS CODIFICATION

Codificação das ferramentas de fresagem | Codificación de heramientas de fresado

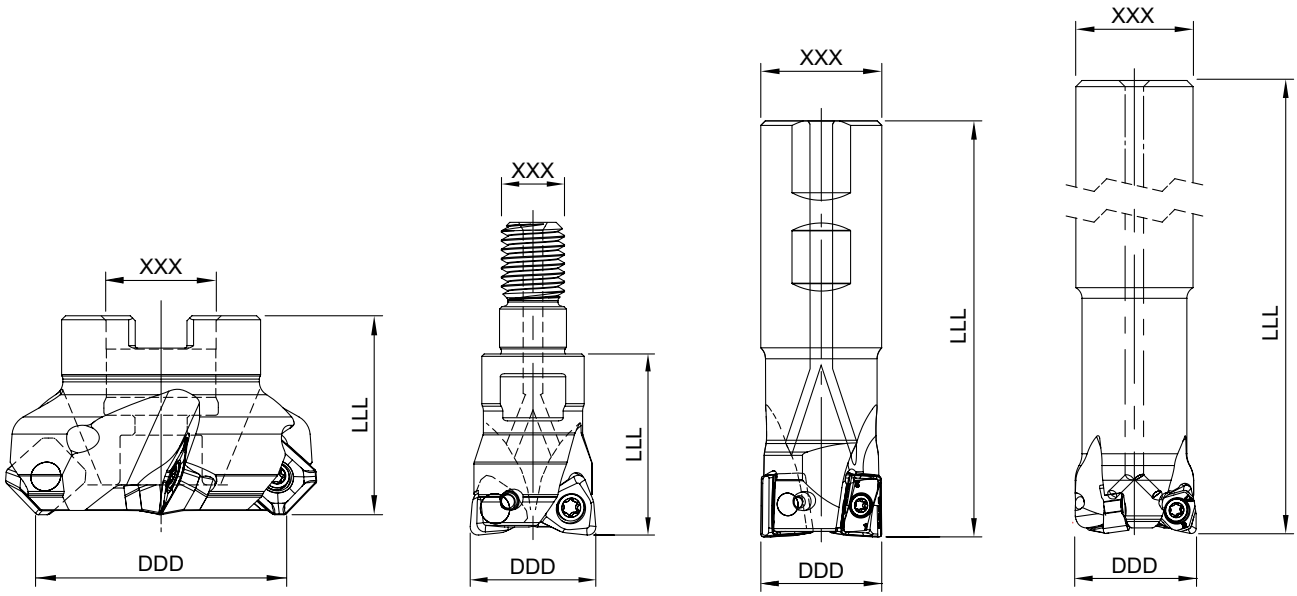

D D D Y Z Z Z T T - N N - L L U - X X X - L L L - L

- Diameter / Diâmetro / Diametro
- Coupling Type (A-8) / Tipo de acoplamento (A-8) / Tipo de acoplamiento (A-8)
- Insert Type (A-7) / Pastilha aplicável (A-7) / Inserto aplicable (A-7)
- Lead angle / Ângulo de posicionamento da pastilha / Ángulo de posicion del inserto
- Number of teeth / Número de dentes / Numero de dientes
- Axial angle (angle of the tool construtions) / Ângulo Axial (ângulo de construção da ferramenta) / Ángulo Axial (ángulo de la construcción de herramienta)
- Cooling system / Refrigeração / Refrigeración
  - U - Whitout cooling system
  - U - Sem refrigeração
  - U - Sin refrigeración
- Coupling diameter / Diâmetro de acoplamento / Diámetro de acoplamiento
- Total lenght / Comprimento total / Longitud total
- Rotation (R/L) / Rotação (R/L) / Rotación (R/L)
  *In case of right rotation the "R" is supressed.

MILLING TOOLS OVERVIEW

	LINEPRO 00036	LINEPRO 06045	LINEPRO 06290	P. HIFEED 06320	HIFEED 06410	HIFEED 06590	HIFEED 06690	HIFEED 06815	ALUPRO 08390	LINEPRO 09945	LINEPRO 15090	LINEPRO 17090
Page	78	72	162	80	84	106	88	94	160	74	174	164
Insert	PD... 1204...	SE... 1204...	SP... 1204...	POKT 0403...	SO... 0803...	SP... 08T3...	SO... 13M5...	SO... 1605...	VCGX 2205...	SE... 13T3...	AD... 1505...	AP... 1003...
Arbor mouting	Ø 66-160	Ø 50-160	Ø 40-160	Ø 40-66	-	-	Ø 50-100	Ø 63-160	-	Ø 50-250	Ø 40-125	Ø 40-63
Weldon Shank	-	-	-	-	Ø 20-32	Ø 20-32	-	-	-	-	-	Ø 16-25
Cylindrical Shank	-	-	-	Ø 20-40	-	-	-	-	-	-	-	-
Threaded Coupling	-	-	-	Ø 16-42	Ø 20-42	Ø 20-42	Ø 32-42	-	Ø 32	-	Ø 25-40	Ø 16-25
Facing	●	●	○	●	●	●	●	●	○	●	○	○
Shouldering			●						●		●	●
Slanted Shoulder & Chamfer	○	○								○		
Ramp down	○			○	○	○	○	○	○		○	○
Helical Interpolation	○			○	○	○	○	○	○		○	○
Plunging				○	○	○	○	○				
Side milling												
Slotting									○		○	○
Profiling				●	●	●	●	●	○			
Copying				●	●	●	●	●	○			
Plunging & Recessing									○			

● Main Operation ○ Other Operations

	PLUS 17190	PLUS 17590	LINEPRO 18090	PLUS 18190	LINEPRO 20090	LINEPRO 20190	LINEPRO 20290	TOROMILL 24590	TOROMILL 25090	TOROMILL 25190	TOROMILL 25290	TOROMILL 25390	PLUS 28088
	112	116	170	120	124	130	136	192	192	192	194	194	52
	ANHX 1004...	ANHX 1206...	AP... 1604...	ANHX 1607...	XPET 0602...	XPET 1003...	XPET 1706...	RD... 0702...	RD... 1003...	RD... 12T3...	RD... 1604...	RD... 2006..	SN...U 1206...
	Ø 40-100	Ø 40-125	Ø 40-125	Ø 50-160	-	Ø 40-63	Ø 40-125	-	Ø 42-52	Ø 50-80	Ø 52-160	Ø 80-160	Ø 50-200
	Ø 14-40	Ø 25-40	Ø 25-40	Ø 32-40	-	Ø 16-27	Ø 32-40	Ø 15	Ø 20	Ø 25	-	-	-
	-	Ø 26-33	-	-	Ø 10-21	-	-	-	-	-	-	-	-
	-	Ø 25-42	-	Ø 32-40	Ø 10-32	Ø 16-40	-	Ø 15-20	Ø 20-42	Ø 24-42	Ø 32-35	-	-
	●	●	●	●	○	○	●	●	●	●	●	●	○
	○	○	○	○	○	○	○						●
			●		●	●	●	●	●	●	●	●	
			●		●	●	●	●	●	●	●	●	
	●	●		●	●	●	●	●	●	●	●	●	
					● (only with XPET-HF)	● (only with XPET-HF)							
	●	●	●	●	●	●	●	●	●	●	●	●	
					●	●		○	○	○	○	○	
					●	●		○	○	○	○	○	

MILLING TOOLS OVERVIEW

	TOROMILL 33590	TOROMILL 33690	TOROMILL 33790	TOROMILL 33890	TOROMILL 33990	TOROMILL X2 35190	LINEPRO 40095	LINEPRO 40595	LINEPRO 41095	PLUS 45095	PLUS 49090	PLUS 49095
Page	182	182	183	184	184	188	200	200	200	180	110	178
Insert	RDHT 0802...	RPHT 10T3...	RPHT 1204...	RPHT 1605...	RPHT 2006...	RNHX 1204...	XD... 0602...	XD... 10T3...	XD... 0401...	WNHU 0604...	WNHU 04T308-LP	WNHU 04T3...
Arbor mouting	-	Ø 42-52	Ø 40-80	Ø 50-125	Ø 80-125	Ø 40-80	-	Ø 52-80	-	-	-	-
Weldon Shank	Ø 16-25	Ø 20-32	-	-	-	Ø 32	-	-	-	-	-	-
Cylindrical Shank	Ø 16-25	Ø 20-32	-	-	-	-	-	-	-	-	Ø 16-25	-
Threaded Coupling	Ø 16-32	Ø 20-35	-	-	-	Ø 32-42	Ø 16-25	Ø 25-42	Ø 10-12	Ø 25-42	Ø 16-32	Ø 16-35
Facing	●	●	●	●	●	●	●	●	●	●	●	●
Shouldering											◉	
Slanted Shoulder & Chamfer												
Ramp down	●	●	●	●	●	●	●	●	●			
Helical Interpolation	●	●	●	●	●	●	●	●	●			
Plunging												
Side milling												
Slotting	●	●	●	●	●	●	●	●	●			
Profiling	◉	◉	◉	◉	◉	◉	◉	◉	◉	◉		◉
Copying	◉	◉	◉	◉	◉	◉	◉	◉	◉	◉		◉
Plunging & Recessing												

◉ Main Operation ● Other Operations

	HIFEED 50060	HIFEED 50560	HARDMILL 72090	ALUPRO 76090	ALUPRO 77090	TGPLUS 90090 NEW	TGPLUS 90190	PLUS 90260	TGPLUS 90390	PLUS 90845	PLUS 90945	PLUS 91245
	102	98	204	152	156	140	144	56	148	60	64	68
	WN... 1207...	WD... 1204...	XNHW 1205...	XDGX 15M5...	XDGX 22M7...	LNXT 0904...	LNXT 1306...	PN... 1105...	LNXT 1506...	SN... 1206... ON... 0505...	SN...1206...	SN... 1606... ON... 0606...
	Ø 52-80	Ø 52-80	Ø 40-160	Ø 40-100	Ø 50-125	Ø 40-63	Ø 40-125	Ø 50-160	Ø 50-160	Ø 50-250	Ø 50-250	Ø 63-250
	-	-	-	-	-	Ø 16-32	Ø 25-40	-	-	Ø 32-40	-	-
	-	-	-	Ø 20-40	Ø 32-40	Ø 25-32	Ø 25-40	-	-	-	-	-
	Ø 35	-	-	-	-	Ø 25-32	-	-	-	-	-	-
	●	●	●	○	○	○	○	●	○	●	●	●
			○	●	●	●	●		●			
										○	○	○
	○	○		○	○							
	○	○		○	○							
	○											
				○	○	○	○		○			
	●	●		○	○							
	●	●										
				○	○							

FACE MILLING CUTTERS

Program	PLUS 28088	PLUS 90260	PLUS 90845	PLUS 90945
	Proprietary milling line 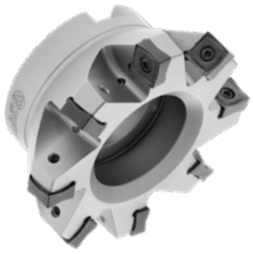	Proprietary milling line 	Proprietary milling line 	Proprietary milling line 
Material	P M K	P K	P M K N S	P M K N S
Main Operation	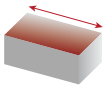 Facing	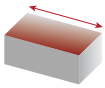 Facing	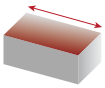 Facing	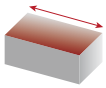 Facing
Kr°	88°	60°	45°	45°
Range (ØDc - mm)	50 - 200	50 - 160	32 - 250	50 - 250
Insert	SN...1206... 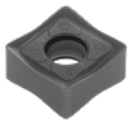	PN...1105... 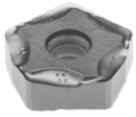	SN...1206... & ON...0505... 	SN...1206... 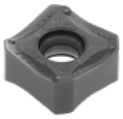
Couplings	Arbor mounting	Arbor mounting	Arbor mounting Weldon shank	Arbor mounting
Other Operations	 Shouldering		 Slanted Shoulder & Chamfer	 Slanted Shoulder & Chamfer
Page	52	56	60	64
Features	Indexable face mills with 8 helical cutting edges For rough to semi-finish with high-efficiency face milling Cutting edge angle enables performing face milling very close to the sidewall	Economical because double sided inserts applied 10 coners available improved insert design for distribution of cutting forces Excellent solution for cast iron	New line for Heavy and Soft face milling Two different geometries for same pocket Insert geometries available for all applications materials Excellent surface finishing	Economical because double sided inserts applied Variety of insert geometries is available for all applications materials Excellent surface finishing Available in regular and fine pitch cutters

FACE MILLING CUTTERS

Program	PLUS 91245	LINEPRO 06045	LINEPRO 09945	LINEPRO 00036
	Proprietary milling line 		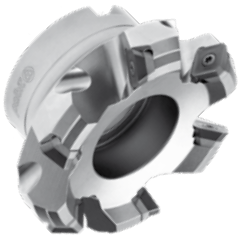	
Material	P M K	P M K N	P M K N	P K
Main Operation	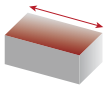 Facing	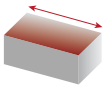 Facing	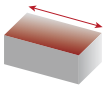 Facing	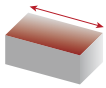 Facing
Kr°	45°	45°	45°	36°
Range (ØDc - mm)	63 - 250	50 - 160	50 - 250	66 - 160
Insert	SN...1606... & ON...0606... 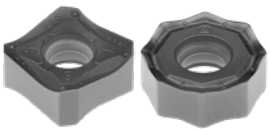	SE...1204... 	SE...13T3... 	PD...1204... 
Couplings	Arbor mounting	Arbor mounting	Arbor mounting	Arbor mounting
Other Operations	 Slanted Shoulder & Chamfer	 Slanted Shoulder & Chamfer	 Slanted Shoulder & Chamfer	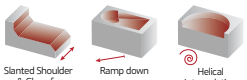 Slanted Shoulder & Chamfer; Ramp down; Helical Interpolation
Page	68	72	74	78
Features	Two different geometries for same pocket Excellent surface finishing Available in regular and fine pitch cutters	Low cutting forces Good chip flow	Low cutting forces Suitable for high-speed machining Excellent chip flow High rigidity due to carbide shim	High rake angle and low cutting forces

HIFEED MILLING CUTTERS

Program	HIFEED 06320	HIFEED 06410	HIFEED 06690	HIFEED 06815
	Proprietary milling line 	Proprietary milling line 	Proprietary milling line 	Proprietary milling line 
Material	P M K S	P M K S	P M K S	P M K S
Main Operation	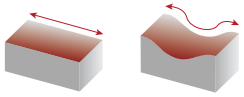 Facing Profiling	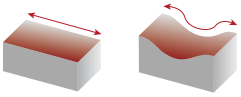 Facing Profiling	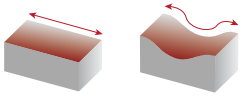 Facing Profiling	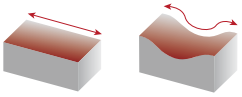 Facing Profiling
Kr°	20°	10°	10°	15°
Range (ØDc - mm)	20 - 66	20 - 42	32 - 100	63 - 160
	POKT 0403...	SO...0803...	SO...13M5...	SO...1605...
Insert				
Couplings	Arbor mounting Cylindrical shank Threaded coupling	Weldon shank Threaded coupling	Arbor mounting Threaded coupling	Arbor mounting
Other Operations	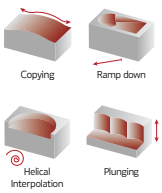 Copying Ramp down Helical Interpolation Plunging	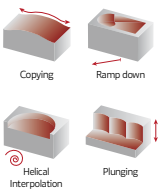 Copying Ramp down Helical Interpolation Plunging	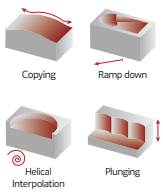 Copying Ramp down Helical Interpolation Plunging	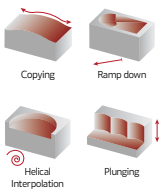 Copying Ramp down Helical Interpolation Plunging
Page	80	84	88	94
Features	High feed cutting with low cutting load High productivity	High feed cutting with low cutting load High productivity		

HIFEED MILLING CUTTERS

Program	HIFEED 50560	HIFEED 50060	HIFEED 06590	PRO 20090 | 20190
		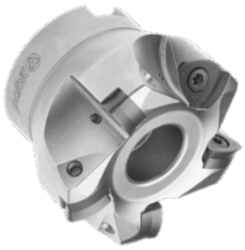		Proprietary milling line 
Material	P M K S	P K	P M K	P M K S
Main Operation	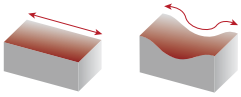 Facing Profiling	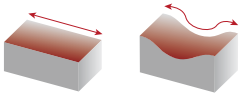 Facing Profiling	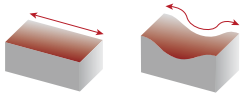 Facing Profiling	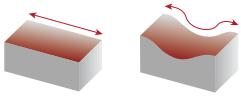 Facing Profiling
Kr°	-	-	10°	90°
Range	52 - 80	52 - 80	20 - 42	10 - 63
Insert	WD...1204... 	WN...1207... 	SP...08T3... 	XPET 0602... - HF | XPET 1003... - HF 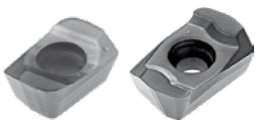
Couplings	Arbor mounting	Arbor mounting Threaded coupling	Weldon shank Threaded coupling	Arbor mounting Cylindrical shank Threaded coupling
Other Operations	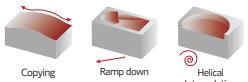 Copying Ramp down Helical Interpolation	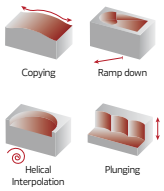 Copying Ramp down Helical Interpolation Plunging	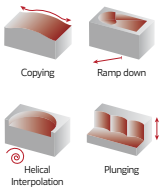 Copying Ramp down Helical Interpolation Plunging	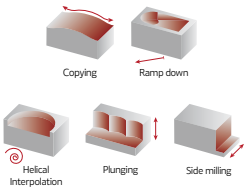 Copying Ramp down Helical Interpolation Plunging Side milling
Page	98	102	106	124 | 130
Features	High feed cutting with low cutting load	High feed cutting with low cutting load Excellent in high overhang	High feed cutting with low cutting load	Chipbreaker HF for Hifeed machining

SHOULDER MILLING CUTTERS

Program	PLUS 49090	PLUS 17190	PLUS 17590	PLUS 18190
	Proprietary milling line 	Proprietary milling line 	Proprietary milling line 	Proprietary milling line 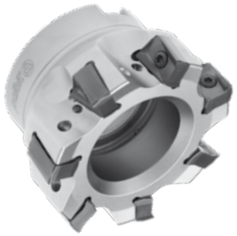
Material	P K	P M K N S	P M K S	P K N
Main Operation	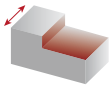 Shouldering	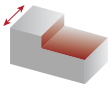 Shouldering	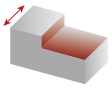 Shouldering	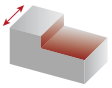 Shouldering
Kr°	90°	90°	90°	90°
Range (ØDc - mm)	16 - 32	14 - 100	25 - 125	32 - 160
Insert	WNHU 04T308-LP 	ANHX 1004... 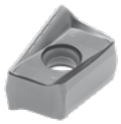	ANHX 1206... 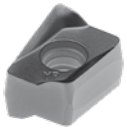	ANHX 1607... 
Couplings	Cylindrical shank Threaded coupling	Arbor mounting Weldon shank	Arbor mounting Weldon shank Cylindrical shank Threaded coupling	Arbor mounting Weldon shank Threaded coupling
Other Operations	 Facing	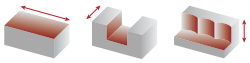 Facing Slotting Plunging	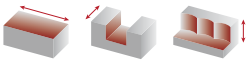 Facing Slotting Plunging	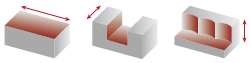 Facing Slotting Plunging
Page	110	112	116	120
Features	Economical because double sided inserts applied	4 corners insert with positive cutting edge Variety of insert geometries is available for all applications Helical cutting edge Available in regular and fine pitch cutters		

SHOULDER MILLING CUTTERS

Program	LINEPRO 20090	LINEPRO 20190	LINEPRO 20290
	Proprietary milling line 	Proprietary milling line 	Proprietary milling line 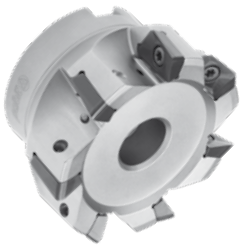
Material	P M K N S H	P M K N S H	P M K N S
Main Operation	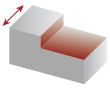 Shouldering	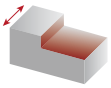 Shouldering	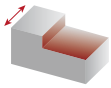 Shouldering
Kr°	90°	90°	90°
Range (ØDc - mm)	10 - 32	16 - 63	32 - 125
Insert	XP...0602... 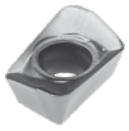	XP...1003... 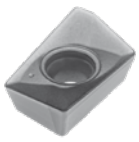	XP...1706... 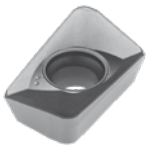
Couplings	Cylindrical shank Threaded coupling	Arbor mounting Weldon shank Threaded coupling	Arbor mounting Weldon shank
Other Operations	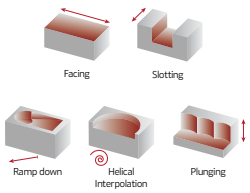	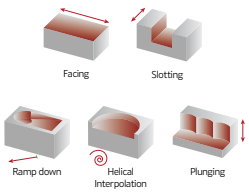	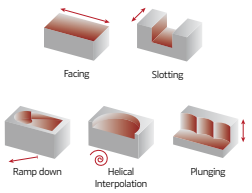
Page	124	130	136
Features	Excellent solution for square shoulder milling Offers longer tool life, better tolerances and better productivity parameters Low power requirement & smooth cutting possible due to positive helical angle Very flexible and suitable for most milling operations High positive cutting rake geometry		

SHOULDER MILLING CUTTERS

Program	TGPLUS 90090 NEW	TGPLUS 90190	TGPLUS 90390
	Proprietary milling line 	Proprietary milling line 	Proprietary milling line 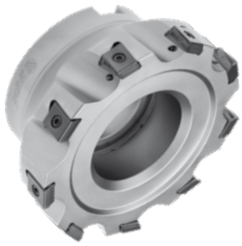
Material	P M K	P M K	P K
Main Operation	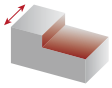 Shouldering	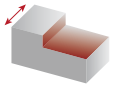 Shouldering	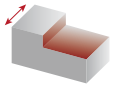 Shouldering
Kr°	90°	90°	90°
Range (ØDc - mm)	16 - 63	25 - 125	50 - 160
Insert	LNXT 0904... 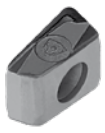	LNXT 1306... 	LNXT 1506... 
Couplings	Arbor mounting Weldon shank Cylindrical shank Threaded coupling	Arbor mounting Cylindrical shank Weldon shank	Arbor mounting
Other Operations	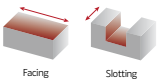 Facing Slotting	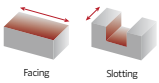 Facing Slotting	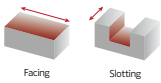 Facing Slotting
Page	140	144	148
Features	Tangential inserts with 4 corners available High rake angle insert reduces cutting force Excellent insert rigidity and excellent machining stability Improved pocket configuration Available in regular and fine pitch cutters		

SHOULDER MILLING CUTTERS

Program	ALUPRO 76090	ALUPRO 77090	ALUPRO 08390
	Proprietary milling line 	Proprietary milling line 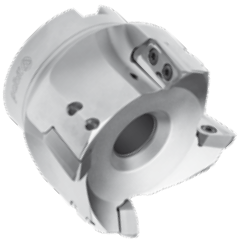	
Material	N	N	N
Main Operation	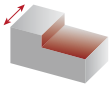 Shouldering	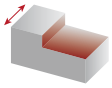 Shouldering	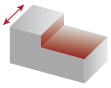 Shouldering
Kr°	90°	90°	90°
Range (ØDc - mm)	20 - 100	32 - 125	32
Insert	XDGX 15M5... 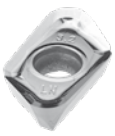	XDGX 22M7... 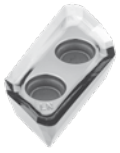	VCGX 2205... 
Couplings	Arbor mounting Cylindrical shank	Arbor mounting Cylindrical shank	Threaded coupling
Other Operations	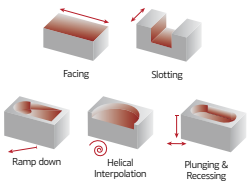	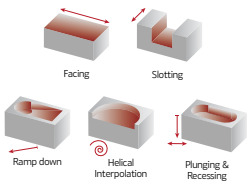	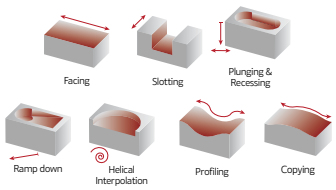
Page	152	156	160
Features	Solution for multi functional milling operations on aluminium alloys High speed conditions with high metal remove rate Stable clamping conditions (Anti-fly) High rake angle geometry that provides a good surface finish and low cutting forces		Excellent chip flow

SHOULDER MILLING CUTTERS

Program	LINEPRO 06290	LINEPRO 17090
		
Material	P M K S	P M K N
Main Operation	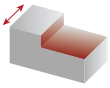 Shouldering	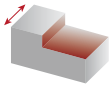 Shouldering
Kr°	90°	90°
Range (ØDc - mm)	40 - 160	16 - 63
Insert	SP...1204...	AP...1003...
	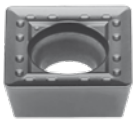	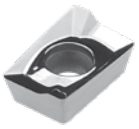
Couplings	Arbor mounting	Arbor mounting Weldon shank Threaded coupling
Other Operations	 Facing	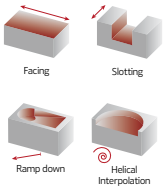 Facing Slotting Ramp down Helical Interpolation
Page	162	164
Features	Positive inserts with 4 cutting edges Recommended for conventional milling machines and machining centers	Strong insert and low cutting force Helical cutting edge Good chip evacuation

SHOULDER MILLING CUTTERS

Program	LINEPRO 18090	LINEPRO 15090
	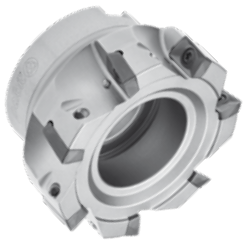	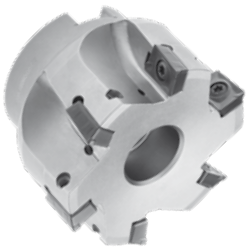
Material	P M K N	P M K
Main Operation	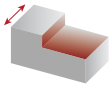 Shouldering	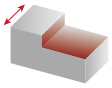 Shouldering
Kr°	90°	90°
Range (ØDc - mm)	25 - 125	25 - 125
Insert	AP...1604... 	AD...1505... 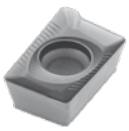
Couplings	Arbor mounting Weldon shank	Arbor mounting Threaded coupling
Other Operations	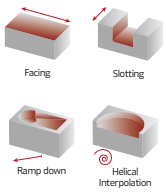	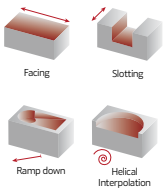
Page	170	174
Features	Strong insert and low cutting forces Helical cutting edge Good chip evacuation	

PROFILE MILLING CUTTERS

Program	PLUS 49095	PLUS 45095	TOROMILL 33590	TOROMILL 33690
	Proprietary milling line 	Proprietary milling line 	Proprietary milling line 	Proprietary milling line 
Material	P K H	P K H	M S	M S
Main Operation	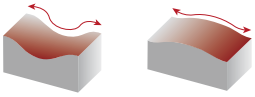 Profiling Copying	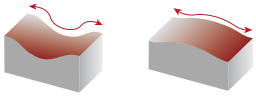 Profiling Copying	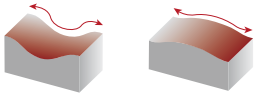 Profiling Copying	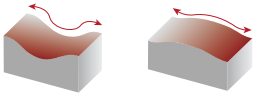 Profiling Copying
Kr°	95°	95°	-	-
Range (ØDc - mm)	16 - 35	25 - 42	16 -32	20 - 52
Insert	WNHU 04T3... 	WNHU 0604... 	RDHT 0802... 	RPHT 10T3... 
Couplings	Threaded coupling	Threaded coupling	Weldon shank Cylindrical shank Threaded coupling	Arbor mounting Weldon shank Cylindrical shank Threaded coupling
Other Operations	 Facing	 Facing	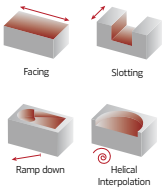 Facing Slotting Ramp down Helical Interpolation	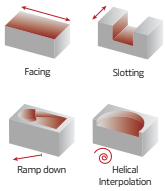 Facing Slotting Ramp down Helical Interpolation
Page	178	180	182	182
Features	Economical because double sided inserts applied Designed for finishing and profile miling Robust geometry		Excellent solution for profile milling Low power requirement & smooth cutting possible due to positive helical angle First choice for problematic materials (M and S material classes) High positive cutting rake geometry	

PROFILE MILLING CUTTERS

Program	TOROMILL 33790	TOROMILL 33890	TOROMILL 33990	TOROMILL X2 35190
	Proprietary milling line	Proprietary milling line	Proprietary milling line	Proprietary milling line
				
Material	M S	M S	M S	P M K S
Main Operation	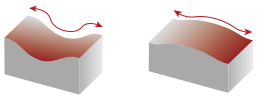 Profiling Copying	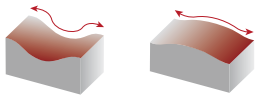 Profiling Copying	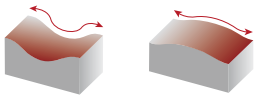 Profiling Copying	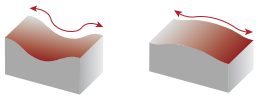 Profiling Copying
Kr°	-	-	-	-
Range (ØDc - mm)	40 - 80	50 - 125	80 - 125	32 - 80
Insert	RPHT 1204... 	RPHT 1605... 	RPHT 2006... 	RNHX 1204... 
Couplings	Arbor mounting	Arbor mounting	Arbor mounting	Arbor mounting Weldon shank Threaded coupling
Other Operations	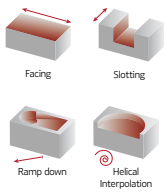 Facing Slotting Ramp down Helical Interpolation	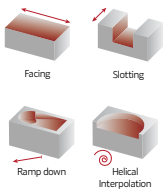 Facing Slotting Ramp down Helical Interpolation	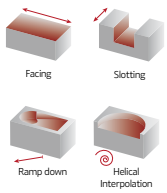 Facing Slotting Ramp down Helical Interpolation	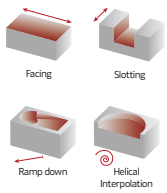 Facing Slotting Ramp down Helical Interpolation
Page	183	184	184	188
Features	Excellent solution for Profile milling Low power requirement & smooth cutting possible due to positive helical angle First choice for problematic materials (M and S material classes) High positive cutting rake geometry			Excellent solution for Profile milling "First choice for problematic materials (M and S material classes) High positive cutting rake geometry

PROFILE MILLING CUTTERS

Program	TOROMILL 24590	TOROMILL 25090	TOROMILL 25190	TOROMILL 25290
				
Material	P K H	P K H	P K H	P K H
Main Operation	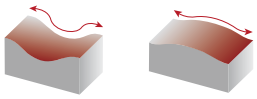 Profiling Copying	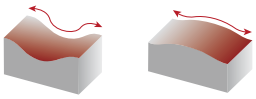 Profiling Copying	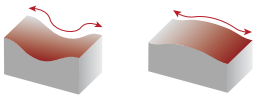 Profiling Copying	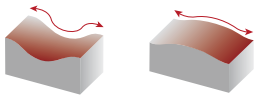 Profiling Copying
Kr°	-	-	-	-
Range (ØDc - mm)	15 - 20	20 - 52	24 - 80	32 - 160
Insert	RD...0702... 	RD...1003... 	RD...12T3... 	RD...1604... 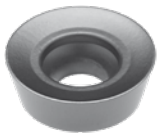
Couplings	Weldon shank Threaded coupling	Arbor mounting Weldon shank Threaded coupling	Arbor mounting Weldon shank Threaded coupling	Arbor mounting Threaded coupling
Other Operations	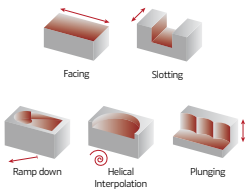 Facing Slotting Ramp down Helical Interpolation Plunging	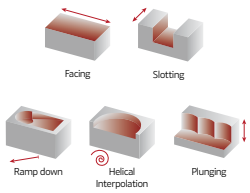 Facing Slotting Ramp down Helical Interpolation Plunging	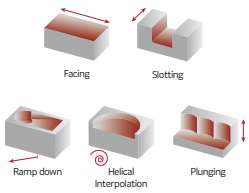 Facing Slotting Ramp down Helical Interpolation Plunging	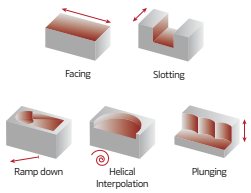 Facing Slotting Ramp down Helical Interpolation Plunging
Page	192	192	192	194
Features	Offers longer tool life, better tolerances and better productivity parameters Low power requirement & smooth cutting possible due to positive helical angle Very flexible and suitable for most milling operations High positive cutting rake geometry			

PROFILE MILLING CUTTERS

Program	TOROMILL 25390	LINEPRO 40095	LINEPRO 40595	LINEPRO 41095
				
Material	P K H	P K N H	P K N H	P K N H
Main Operation	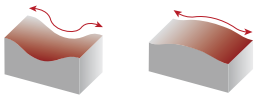 Profiling Copying	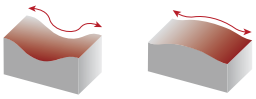 Profiling Copying	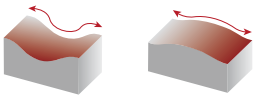 Profiling Copying	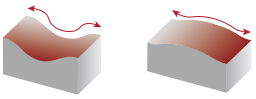 Profiling Copying
Kr°	-	95°	95°	95°
Range (ØDc - mm)	80 - 160	16 - 25	25 - 80	10 - 12
Insert	RD...2006... 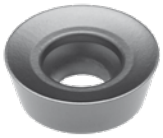	XD...0602... 	XD...10T3... 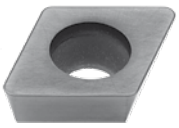	XD...0401... 
Couplings	Arbor mounting	Threaded coupling	Arbor mounting Threaded coupling	Threaded coupling
Other Operations	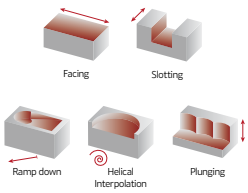 Facing Slotting Ramp down Helical Interpolation Plunging	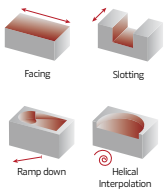 Facing Slotting Ramp down Helical Interpolation	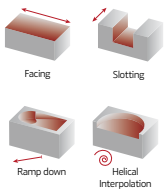 Facing Slotting Ramp down Helical Interpolation	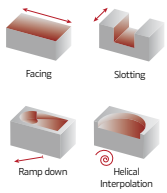 Facing Slotting Ramp down Helical Interpolation
Page	194	200	200	200
Features	Offers longer tool life, better tolerances and better productivity parameters Low power requirement & smooth cutting possible due to positive helical angle Very flexible and suitable for most milling operations High positive cutting rake geometry	Designed for finishing and profile milling Low power consumption		

HARDMILL	
Program	HARDMILL 72090
	
Material	K N
Main Operation	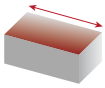 Facing
Kr°	90°
Range (ØDc - mm)	40 - 160
Insert	XNHW 1205...
	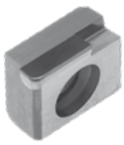
Couplings	Arbor mounting
Other Operations	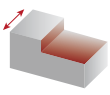 Shouldering
Page	204
Features	Excellent solution for aluminium PCD tip

Program	CENTER & CHAMFER	SPOT FACE NEW
		
Material	P M K	P M K
Range (ØDc - mm)	13	10 - 21
Insert	SOMT 11T308	SPKX 05... | 06... | 07... | 09...
		
Couplings	Weldon Shank	Weldon Shank Cylindrical shank
	Spotting Chamfering Engraving Grooving Spot Drilling	Spot face
Page	209	212
Features	Milling tool for a wide range of center & chamfer operations	Economical solution Smooth cutting

MILLING INSERTS ISO IDENTIFICATION SYSTEM

H	120°	M	86°
O	135°	V	35°
P	108°	W	80°
S	90°	L	90°
T	60°	A	85°
C	80°	B	82°
D	55°	K	55°
E	75°	R	
F	50°	X	Special

1- Insert shape symbol

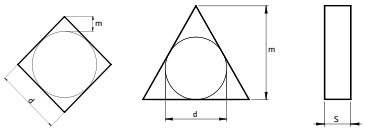

Symbol	m (mm)	d (mm)	s (mm)
A	±0.005	±0.025	±0.025
F	±0.005	±0.013	±0.025
C	±0.013	±0.025	±0.025
H	±0.013	±0.013	±0.025
E	±0.025	±0.025	±0.025
G	±0.025	±0.025	±0.13
J	±0.005	±0.05~±0.13	±0.025
K*	±0.013	±0.05~±0.13	±0.025
L*	±0.025	±0.05~±0.13	±0.025
M*	±0.08~±0.20	±0.05~±0.13	±0.13
N*	±0.08~±0.20	±0.05~±0.13	±0.025
U*	±0.13~±0.38	±0.08~±0.25	±0.13

*As a rule, the sides of these inserts are as sintered. Tolerance differs with insert size, for the accuracy of class M, refer to the table on the right.

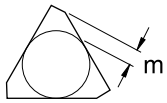

Triangular inserts with a facet (secondary cutting edge)

Detailed dimension of M class insert
Insert height Tolerances (mm)

Inscribed circle	T	S	C	D	V
6.35	±0.08	-	-	-	-
9.525	±0.08	±0.08	±0.11	±0.10	±0.13
12.70	±0.13	±0.13	±0.13	±0.15	-
15.875	±0.15	±0.15	±0.15	±0.18	-
19.05	±0.15	±0.15	±0.15	±0.18	-
25.40	-	±0.18	-	-	-
31.75	-	±0.25	-	-	-

Inscribed circle Tolerances (mm)

Inscribed circle	T	S	C	D	V
6.35	±0.05	-	-	-	-
9.525	±0.05	±0.05	±0.05	±0.05	±0.05
12.70	±0.08	±0.08	±0.08	±0.08	±0.08
15.875	±0.10	±0.10	±0.10	±0.10	±0.10
19.05	-	-	-	-	±0.10
25.40	-	±0.13	-	-	±0.10
31.75	-	±0.20	-	-	±0.12

3 - Tolerances symbol

A	B	C	D	E
3°	5°	7°	15°	20°
F	**G**	**N**	**P**	**O**
25°	30°	0	11°	Other clearance angle

2 - Normal clearance symbol

ISO	T	N	G	N
ANSI	T	N	G	N

4 - Insert symbol

symbol	Type	Hole type	Chipbreaker	Shape
W	with hole	Round hole / one countersink (40°~60°)	Without chipbreaker	
T			Chipbreaker on one side	
Q		Round hole / double countersink (40°~60°)	Without chipbreaker	
U			Chipbreaker on both sides	
B		Round hole / one countersink (70°~90°)	Without chipbreaker	

symbol	Type	Hole type	Chipbreaker	Shape
H	with hole	Round hole / one countersink (70°~90°)	Chipbreaker on one side	
C		Round hole / double countersink (70°~90°)	Without chipbreaker	
J			Chipbreaker on both sides	
A		Round hole	Without chipbreaker	
M			Chipbreaker on one side	

symbol	Type	Hole type	Chipbreaker	Shape
G	with hole	Round hole	Chipbreaker on both sides	
N	without hole	-	Without chipbreaker	
R		-	Chipbreaker on one side	
F		-	Chipbreaker on both sides	
X	-	-	-	On request

R's	V's (35°)	D's (55°)	C's (80°)	S's (90°)	T's (60°)	W's (80°)	Ø CI mm	Ø CI inch	ANSI Symbol
-	06	04	-	03	06	02	3,97	5/32	1,20
-	08	05	04	04	08	L3	4,76	3/16	1,50
-	09	06	05	05	09	03	5,56	7/32	1,80
06**	-	-	-	-	-	-	6,00	0,236	
06*	11	07	06	06	11	04	6,35	1/4	2,00
07*	13	09	08	07	13	05	7,94	5/16	2,50
08*	-	-	-	-	-	-	8,00	0,315	
09*	16	11	09	09	16	06	9,525	3/8	3,00
10**	-	-	-	-	-	-	10,00	0,394	
12**	-	-	-	-	-	-	12,00	0,472	
12*	22	15	12	12	22	08	12,70	1/2	4,00
15*	27	19	16	15	27	10	15,875	5/8	5,00
16**	-	-	-	-	-	-	16,00	0,63	
19*	33	23	19	19	33	13	19,05	3/4	6,00
20**	-	-	-	-	-	-	20,00	0,787	
25**	-	-	-	-	-	-	25,00	0,984	
25*	44	31	25	25	44	17	25,40	1,00	8,00
31*	54	38	32	31	54	21	31,75	1 1/4	10,00
32**	-	-	-	-	-	-	32,00	1,26	

5 - Insert size symbol

* ANSI designation only (Radius Designation is 00)

** Metric designation only (Radius Designation is M0)

According to International Standard ISO 1832 - 2012(E)

"Indexable inserts for cutting tools - Designation"

ISO	mm	ANSI	inch
01	1.59	1	0.062
T1	1.98	1.2	0.078
02	2.38	1.5	0.094
03	3.18	2	0.125
T3	3.97	2.5	0.156
04	4.76	3	0.188
05	5.56	3.5	0.219
06	6.35	4	0.250
07	7.94	5	0.312
09	9.52	6	0.375
12	12.70	8	0.500

6 - Insert thickness symbol

1	2	3	4	5	6
16	03	08 AN	E	N	MP
3	2	2	E	N	MP

10 - Chipbreaker geometries	
Cutting Condition	Main Application
1st letter	2nd letter
L - Light	P - Steel
M - Medium	M - Stainless Steel
H - Heavy	K - Cast Iron
W - Wiper	N - Aluminium
*only when required.	S - HRSA Titanium Alloys
	H - Hardened Materials

Ex.: ANHX 160708 PNER - MP

7 - Insert corner symbol

ISO	mm	inch	ANSI
00	Sharp nose		0
01	0.10	.004	0.2
02	0.20	.008	0.5
04	0.40	.015	1
08	0.80	.032	2
12	1.2	.047	3
16	1.6	.062	4
20	2.0	.078	5
24	2.4	.094	6
28	2.8	.109	7
32	3.2	.125	8
00 (inch or M0/ metric)	Round insert		0

7.1* - Insert edges symbol

For inserts having secondary edges two digits are used:

1st digit is secondary edge		2nd digit is secondary edges relief angle	
A	45°	A	3°
D	60°	B	5°
E	75°	C	7°
F	85°	D	15°
P	90°	E	20°
Z	special	F	25°
*only when required.		G	30°
		N	0°
		P	11°
		Z	special

8* - Cutting edge information

Shape	Honing	Symbol
	No honing	F
	With honing	E
	Chamfered No honing	T
	Chamfred with honing	S
*only when required.		

9 - Cutting direction

Shape	Hand	Symbol
	Right	R
	Left	L
	None	N

NEW

A new step on coating innovation!

NEW

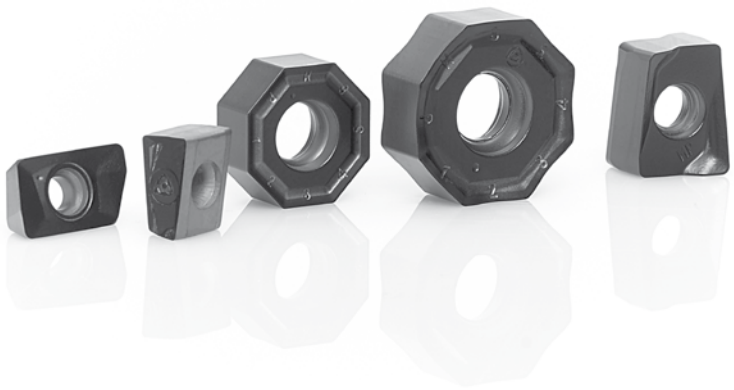

PHS740

PHS
NEW
GRADE

NEW MT CVD coated carbide grade, named PHS.

Developed to provide the best performance on machining of steel alloys under semi-roughing and roughing conditions.

Main features:

- High toughness;
- Redution in machinning time due to the layer of aluminium oxide on an optimized microstruture;
- Extraordinary heat resistance;
- CVD high performance coating with mechanical post treatment and extremely smooth face for optimum tribomechanical wear resistance.

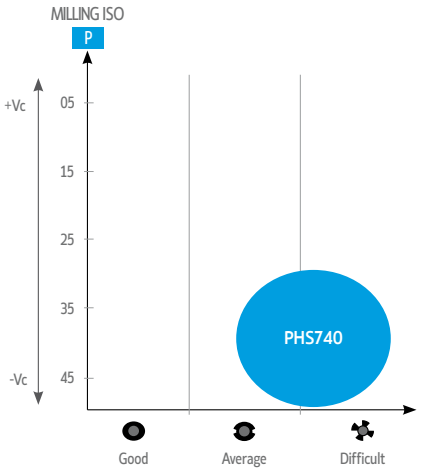

Good Conditions
Average Conditions
Difficult Conditions

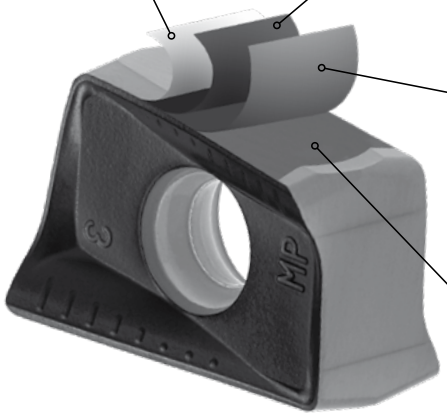

TiC

Top coating for easy wear detection.

Al_2O_3

High strength aluminium oxide coating with excellent thermical resistance and hardness in high temperature.

Ti (C,N)

Fine grain (titanium carbide) coating with columnar struture wich is hard and wear resistance against abrasive wear.

SUBSTRATE

Cemented-carbide substrate that combines high strength with reliable toughness.

PHS740
P30-P50

Ideal for medium to roughing operation in steels at medium cutting speeds.

VIDEO

GRADES CODIFICATION SYSTEM | Sistema de codificação de graus | Codificación de calidad

PH	X	X	XX
PH - Palbit Hardmetal	0 - Uncoated	1 - Steel	01 - ISO Field
PD - Palbit diamond	5 - Gen. Purpose - CVD	2 - Stainess steel	(...)
PB - Palbit PCBN	6 - TiAlN - PVD	3 - Cast Iron	50 - ISO Field
	C - TiAN + TiN - PVD	4 - Non Ferrous	
	7 - AlTiN - PVD	5 - Super Alloys	
	8 - TiN - PVD	6 - Hardened Materials	
	T - TiB_2	7 - Wearparts	
	D - Diamond Coating	9 - Universal Range	
	B - PCBN Coating		
	H - High content of PCBN		
	L - Low Content of PCBN		
	P - Policristaline Diamond		
	G - Al_2O_3 - Gold Bicolor CVD		
	M - Al_2O_3 - TiB_2 - CVD		
	S - Al_2O_3 - Silver Bicolor CVD		

MILLING INSERTS OVERVIEW

FACE MILLING INSERTS

Reference	SNHU	SNKU	PNHX	PNKX	SNHX	SNKX
	Proprietary milling insert	Proprietary milling insert	Proprietary milling insert	Proprietary milling insert	Proprietary milling insert	Proprietary milling insert
	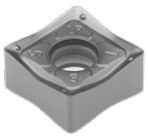	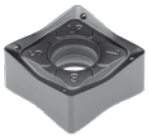	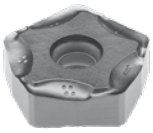		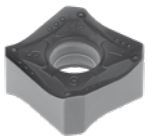	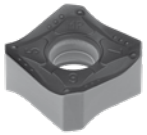
Size	12	12	11	11	12 | 16	12 | 16
Material	P M K	P M K	P K	P K	P M K N S	P K
Page	53	53	57	57	61 | 65 | 69	61 | 65 | 69

HIFEED MILLING INSERTS

Reference	POKT	SOEW	SOET	WDET	WDMW	WNMW
	Proprietary milling insert	Proprietary milling insert	Proprietary milling insert			
						
Size	04	08 | 13 | 16	08 | 13 | 16	12	12	12
Material	P K	P K	P M S	P M S	P K	P K
Page	81	85 | 98 | 94	85 | 89 | 94	98	98	103

SHOULDER MILLING INSERTS

Reference	ANHX	XPET NEW	XPHW NEW	LNXT NEW	XDGX	VCGX
	Proprietary milling insert	Proprietary milling insert	Proprietary milling insert	Proprietary milling insert	Proprietary milling insert	
			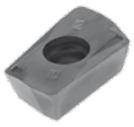		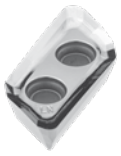	
Size	10 | 12 | 16	06 | 10 | 17	06 | 10	09 | 13 | 15	15 | 22	22
Material	P M K N S	P M K N S	P H	P M K	N	N
Page	112 | 118 | 121	125 | 132 | 137	125 | 132	142 | 145 | 149	153 | 157	160

PROFILE MILLING INSERTS

Reference	WNHU	RDHT	RPHT	RNHX	RDHT	RDHW
	Proprietary milling insert	Proprietary milling insert	Proprietary milling insert	Proprietary milling insert		
					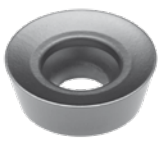	
Size	04 | 06	08	10 | 12 | 16 | 20	12	10 | 12 | 16 | 20	07 | 10 | 12 | 16 | 20
Material	P K H	M S	M S	P M K S	P K	P K H
Page	178 | 180	185	185	189	195	195

FACE MILLING INSERTS

Reference	ONHX	ONKX	SEHW	SEHT	PDMW	PDHW
	Proprietary milling insert	Proprietary milling insert				
	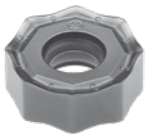	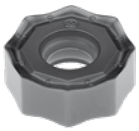			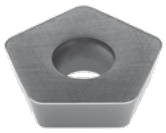	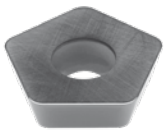
Size	05 | 06	05 | 06	12 | 13	12 | 13	12	12
Material	P M K S	P M K S	P M K	P M K N	P	P K
Page	61 | 69	61 | 69	72 | 75	72 | 75	78	78

HIFEED MILLING INSERTS

Reference	SPKW	SPKT	XPET...HF
			Proprietary milling insert
			
Size	08	08	06 | 10
Material	P K	P M K	P M K S
Page	107	107	125 | 132

SHOULDER MILLING INSERTS

Reference	WNHU
	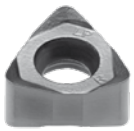
Size	04
Material	P K
Page	111

SHOULDER MILLING INSERTS

Reference	SPMT	SPMW	APET	APKT	APHT	ADKT
			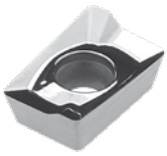	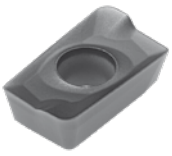		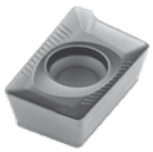
Size	12	12	10	10 | 16	16	15
Material	P M K S	P M K	N	P M K N	N	P M K
Page	162	162	165	165 | 171	171	175

PROFILE MILLING INSERTS

Reference	RDMT	RDMW	XDHW
	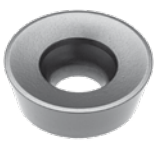	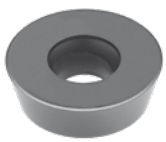	
Size	10 | 12 | 20	10 | 12 | 16 | 20	04 | 06 | 10
Material	P	P K	P K N H
Page	195	195	201

HARDMILL MILLING INSERTS

Reference	XNHW	XDHW
	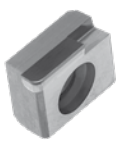	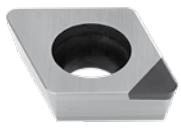
Size	12	04 | 06 | 10
Material	K N	N H
Page	207	201 | 208

MILLING INSERTS OVERVIEW

Inserts Pastilhas Plaquitas	(1) Geometry code	ISO Reference	P							M			K								N	
			PVD							PVD			CVD		PVD						UNC	UNC
		(2) Grade code	M6	54	68	66	78	86	I5	68	66	I5	L5	L9	D2	54	68	67	I5	17	10
			PH6103	PH6910	PH6920	PH6930	PH6125	PH6135	PH6740	PH6920	PH6930	PH6740	PH5705	PH5740	PH6705	PH6910	PH6920	PH6325	PH6740	PH0325	PH0910
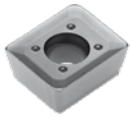	1111423	ACET 150612 TR			◉					◉							◉				
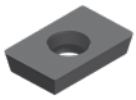	1110005	ADHW 150308 R			○												○				
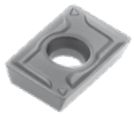	1110010	ADMT 150308R			○			○		○							○				
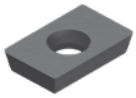	1110011	ADMW 150308R			○												○				
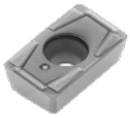	1110014	APFT 1604 PDFR			○												○				
	1110015	APFT 1604 PDSR			◉												◉				
	1110557	APFT 1604 PDTR			○												○				
	1112576	APMT 110308 PDER			○				○			○									
	1112577	APMT 1604 PDER			○				○			○									
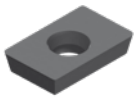	1111184	APFW 1604 PDER			○												○				
	1110016	APFW 1604 PDTR			○												○				
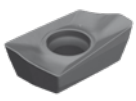	1112192	BOMT 130408R			○												○				
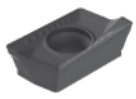	1110038	BCKT 1304 PDR						◉													

◉ First choice | Primeira opção | 1ª opción ◉ Stock item | Produto de stock | Itens de stock ○ Available under request (see page A-7) | Disponível sobre consulta (consulte a página A-7) | Disponible bajo consulta (mire pagina A-7)

Insert order code = (1) Geometry Code + (2) Grade Code

Dimensions (mm) | Dimensões (mm) | Dimensiones (mm)						Drawing
ic	S	l	R	a	F	
12,7	6,35	15,00	1,20	-	1,70	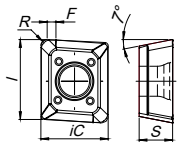
9,53	3,18	15,00	0,80	-	-	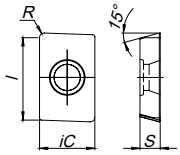
9,53	3,18	15,00	0,80	-	-	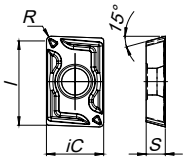
9,53	3,18	15,00	0,80	-	-	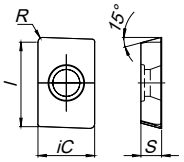
9,53	4,76	16,00	0,80	-	2,00	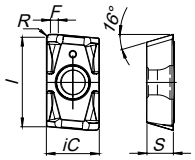
9,53	4,76	16,00	0,80	-	2,00	
9,53	4,76	16,00	0,80	-	2,00	
6,15	3,50	8,50	0,80	-	0,85	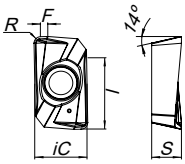
9,45	5,25	14,00	0,80	-	1,10	
9,53	4,76	16,00	0,80	-	2,00	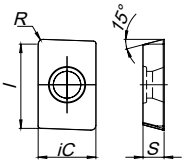
9,53	4,76	16,00	0,80	-	2,00	
8,13	4,85	11,50	1,20	-	1,40	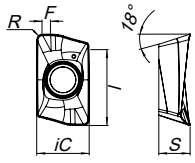
8,41	4,90	12,80	0,61	-	1,40	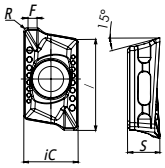

MILLING INSERTS OVERVIEW

Inserts Pastilhas Plaquitas	(1) Geometry code	ISO Reference	P							M		K								N	
			PVD							PVD		CVD		PVD						UNC	UNC
		(2) Grade code	M6	54	68	66	78	86	I5	68	66	L5	L9	D2	54	68	67	I5	17	10
			PH6103	PH6910	PH6920	PH6930	PH6125	PH6135	PH6740	PH6920	PH6930	PH5705	PH5740	PH6705	PH6910	PH6920	PH6325	PH6740	PH0325	PH0910
	1112194	ENHQ 090400 R			○																
	1110617	ENHQ 090400-L			○																
	1112208	ENHQ 090408-L			○																
	1112207	ENHQ 090408-R			○																
	1111037	ENHQ 120600 L			○																
	1110790	ENHQ 120600 R			○																
	1110730	ENHQ 120610 L			○																
	1110729	ENHQ 120610 R			○																
	1111353	ENHQ 120630 TR			○																
	1110793	ENHQ 120640 R			○																
	1110922	HNGF 090520 - V										◎				○	◎				
	1110957	HNGF 090520 - W										◎		◎		○					
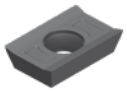	1112410	LDHT 15T3			○																
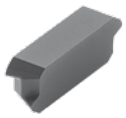	1112388	LNCX 1806 AZ R-11			○											○		○			
	1112428	LNCX 1806 AZ L-11			○											○		○			
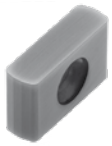	1111876	LNE 323-02														○					
	1111877	LNE 323-10														○					
	1110952	LNE 323-02 SP														○					
	1111420	LNE 434-02														○					
	1111416	LNJN 2205 DDSR-A1														○					

◎ First choice | Primeira opção | 1ª opción

◎ Stock item | Produto de stock | Itens de stock

○ Available under request (see page A-7) | Disponível sobre consulta (consulte a página A-7) | Disponible bajo consulta (mire pagina A-7)

Insert order code = (1) Geometry Code + (2) Grade Code

Dimensions (mm) | Dimensões (mm) | Dimensiones (mm)						Drawing
ic	S	l	R	a	F	
9,52	4,76	-	-	-	-	
9,52	4,76	-	-	-	-	
9,52	4,76	-	0,80	-	-	
9,52	4,76	-	0,80	-	-	
12,70	6,35	-	-	-	-	
12,70	6,35	-	-	-	-	
12,70	6,35	-	1,00	-	-	
12,70	6,35	-	1,00	-	-	
12,70	6,35	-	3,00	-	-	
12,70	6,35	-	4,00	-	-	
16,20	5,56	9,16	2,00	-	-	
16,20	5,56	9,16	2,00	-	-	
9,53	3,95	-	-	-	-	
10,00	6,40	18,77	-	-	2,00	
10,00	6,40	18,77	-	-	2,00	
9,53	4,76	15,88	-	-	0,40	
9,53	4,76	15,88	1,27	-	-	
9,53	4,76	15,88	0,80	-	1,20	
14,28	6,35	19,05	-	-	0,80	
14,00	5,00	22,00	-	2,00	-	

MILLING INSERTS OVERVIEW

Inserts Pastilhas Plaquitas	(1) Geometry code	ISO Reference	P							M			K							N	
			PVD							PVD			CVD	PVD					UNC	UNC	
		(2) Grade code	M6	54	68	66	78	86	I5	68	66	I5	L9	D2	54	68	67	I5	17	10	
			PH6103	PH6910	PH6920	PH6930	PH6125	PH6135	PH6740	PH6920	PH6930	PH6740	PH5740	PH6705	PH6910	PH6920	PH6325	PH6740	PH0325	PH0910	
	1111351	LNJN 3007 DDTP-SP			○																
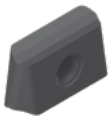	1123709	LNUJ 220920S R			○																
	1111518	OFEN 070405 TN		◎	◎				◎						◎	◎		◎			
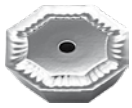	1111569	OFKR 070408 FN-LN																		◎	
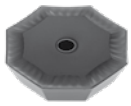	1111568	OFKR 070408 SN-MP		◎	◎		◎		◎			◎			◎	◎		◎			
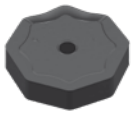	1112015	ONEF 090520 ZZTN-W-14											○								
	1112016	ONMF 090520 ANTN-MK-16											○					○			
	1112133	RPEW 1204 M0			○						○					○					
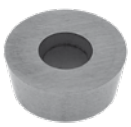	1121079	RPMW 1003 M0			○						○					○					
	1120454	RPMW 1204 M0T			○						○					○					
	1121742	RPMT 1003 M0T			○											○					
	1120448	RPMT 1204 M0T			○											○					

◎ First choice | Primeira opção | 1ª opción ◎ Stock item | Produto de stock | Itens de stock ○ Available under request (see page A-7) | Disponível sobre consulta (consulte a página A-7) | Disponible bajo consulta (mire pagina A-7)

Insert order code = (1) Geometry Code + (2) Grade Code

Dimensions (mm) | Dimensões (mm) | Dimensiones (mm)						Drawing
ic	S	l	R	a	F	
16,00	7,01	30,00	-	2,01	-	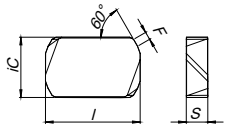
15,88	9,45	24,00	-	1,00	-	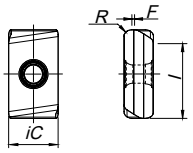
18,00	4,76	7,40	0,60	-	2,20	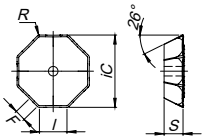
18,00	4,76	7,40	0,60	-	2,20	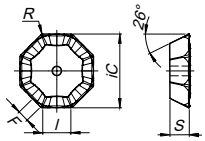
18,00	4,76	7,40	0,60	-	1,60	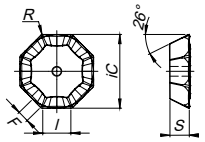
22,00	5,57	9,00	2,00	-	9,00	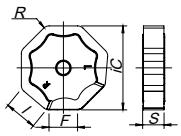
22,00	5,57	9,00	2,00	-	0,60	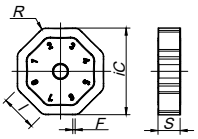
12,00	4,76	-	-	-	-	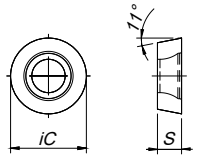
10,00	3,18	-	-	-	-	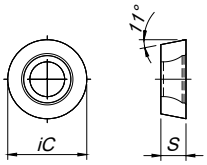
12,00	4,76	-	-	-	-	
10,00	3,18	-	-	-	-	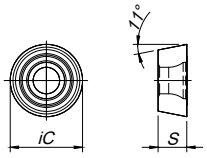
12,00	4,76	-	-	-	-	

MILLING INSERTS OVERVIEW

Inserts Pastilhas Plaquitas	(1) Geometry code	ISO Reference	P							M			K							N	
			PVD							PVD			CVD	PVD						UNC	UNC
		(2) Grade code	M6	54	68	66	78	86	I5	68	66	I5	L9	D2	54	68	67	I5	17	10
			PH6103	PH6910	PH6920	PH6930	PH6125	PH6135	PH6740	PH6920	PH6930	PH6740	PH5740	PH6705	PH6910	PH6920	PH6325	PH6740	PH0325	PH0910
	1110194	SBEX 1204ZZ														○					
	1110200	SDHT 1204 AEEN			○						○					○					
	1110693	SDHT 1204 AFFN		○												○					
	1110201	SDHT 1204 AESN-PL			○		○									○					
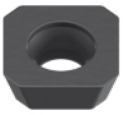	1110818	SDHW 09T3 AEEN			○											○					
	1110743	SDHW 09T3 AEFN			○											○					
	1110781	SDHW 1204 AEEN			○											○					
	1110782	SDHW 1204 AETN			○											○					
	1112339	SDHW 150412			○											○					
	1110206	SEAN 1203 AFEN			○											○					
	1110207	SEAN 1203 AFFN			○											○					
	1110208	SEAN 1203 AFSN			◬											◬					
	1110209	SEAN 1203 AFTN			○											○					
	1110211	SEAN 1504 AFFN			○											○					
	1110212	SEAN 1504 AFTN			○											○					
	1110224	SEHW 1504 AFSN			○											○					
	1110225	SEHW 1504 AFTN			○											○					
	1110226	SEKN 1203 AFEN			○											○					
	1110227	SEKN 1203 AFFN			○											○					
	1110228	SEKN 1203 AFSN			◬											◬					
	1110230	SEKN 1203 AFTN			○											○					
	1110794	SEKN 1204 AFFN			○											○					
	1110232	SEKN 1204 AFSN			◬											◬					
	1110233	SEKN 1204 AFTN			○											○					
	1110235	SEKN 1504 AFEN		◬	◬				◬			◬			◬	◬		◬			
	1110238	SEKN 1504 AFTN			◬				◬							◬		◬			

◬ First choice | Primeira opção | 1ª opción ◬ Stock item | Produto de stock | Itens de stock ○ Available under request (see page A-7) | Disponível sobre consulta (consulte a página A-7) | Disponible bajo consulta (mire pagina A-7)

Insert order code = (1) Geometry Code + (2) Grade Code

Dimensions (mm) | Dimensões (mm) | Dimensiones (mm)						Drawing
ic	S	I	R	a	F	
12,65	4,76	12,70	-	-	-	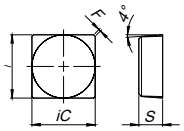
12,70	4,76	10,00	-	-	1,80	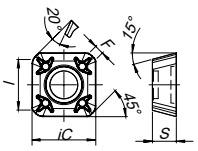
12,70	4,76	10,00	-	-	1,80	
12,70	4,76	10,00	-	-	1,80	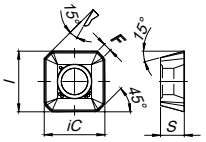
9,53	3,97	7,30	0,30	-	1,50	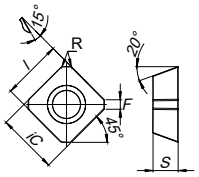
9,53	3,97	7,30	0,30	-	1,50	
12,70	4,76	9,00	-	-	2,50	
12,70	4,76	9,00	-	-	2,50	
15,88	4,76	-	1,20		-	
12,70	3,18	9,20	0,80	-	2,40	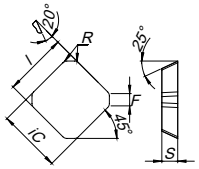
12,70	3,18	9,20	0,80	-	2,40	
12,70	3,18	9,20	1,20	-	2,40	
12,70	3,18	9,20	1,20	-	2,40	
15,88	4,76	11,60	1,00	-	2,40	
15,88	4,76	11,60	1,00	-	2,40	
15,88	4,76	11,60	0,20	-	2,80	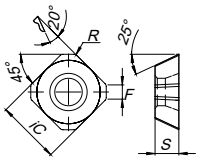
15,88	4,76	11,60	0,20	-	2,80	
12,70	3,18	9,20	1,20	-	2,40	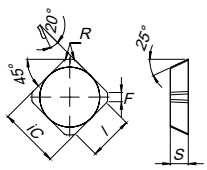
12,70	3,18	9,20	1,20	-	2,40	
12,70	3,18	9,20	1,20	-	2,40	
12,70	3,18	9,20	1,20	-	2,40	
12,70	4,76	9,20	1,20	-	2,40	
12,70	4,76	9,20	1,20	-	2,40	
12,70	4,76	9,20	1,20	-	2,40	
15,88	4,76	12,30	1,00	-	2,40	
15,88	4,76	12,30	1,00	-	2,40	

MILLING INSERTS OVERVIEW

Inserts Pastilhas Plaquitas	(1) Geometry code	ISO Reference	(2) Grade code	P							M			K							N	
				PVD							PVD			CVD	PVD						UNC	UNC
				M6	54	68	66	78	86	I5	68	66	I5	L9	D2	54	68	67	I5	17	10
				PH6103	PH6910	PH6920	PH6930	PH6125	PH6135	PH6740	PH6920	PH6930	PH6740	PH5740	PH6705	PH6910	PH6920	PH6325	PH6740	PH0325	PH0910
	1110239	SEKR 1203 AFEN				◈											◈				
	1110240	SEKR 1203 AFSN				◈											◈				
	1110241	SEKR 1204 AFSN				○											○				
	1110759	SEKR 1504 AFSN				◈				◈							◈		◈		
	1111921	SEXT 14M4 AGSN-M				○											○				
	1110266	SNGN 120408				○											○				
	1110267	SNGN 120412				○											○				
	1110597	SNGN 190412				○											○				
	1110598	SNGN 190416				○											○				
	1110271	SNKN 1204 ENEN				◈											◈				
	1110273	SNKN 1204 ENSN				◈											◈				
	1120541	SNUN 120404				○											○				
	1120542	SNUN 120408				○											○				
	1120544	SNUN 120408				○											○				
	1121880	SNUN 190612T					○														
	1110765	SPGN 090312				○											○				
	1111173	SPGN 090316				○											○				
	1110300	SPGN 120308				○											○				
	1110301	SPGN 120312				○											○				
	1110303	SPGN 120408				○											○				
	1110588	SPGN 120412				○											○				
	1110590	SPGN 150408				○											○				
	1110304	SPGN 150412				○											○				
	1110326	SPKN 1203 EDFR																		◈	
	1110328	SPKN 1203 EDSR				○		◈	◈								○				
	1110330	SPKN 1203 EDTR				◈		◈	◈	◈							◈		◈		
	1110331	SPKN 1204 EDER				◈															
	1110332	SPKN 1204 EDSR				◈				◈							◈		◈		
	1110333	SPKN 1204 EDTR				○											○				

Continue next page | Continua na próxima página | Sige en la página seguiente

◈ First choice | Primeira opção | 1ª opción ◈ Stock item | Produto de stock | Itens de stock ○ Available under request (see page A-7) | Disponível sobre consulta (consulte a página A-7) | Disponible bajo consulta (mire pagina A-7)

Insert order code = (1) Geometry Code + (2) Grade Code

Dimensions (mm) | Dimensões (mm) | Dimensiones (mm)						Drawing
ic	S	l	R	a	F	
12,70	3,18	9,20	1,20	-	2,40	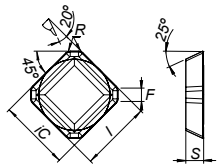
12,70	3,18	9,20	1,20	-	2,40	
12,70	4,76	9,20	1,20	-	2,40	
15,88	4,76	12,30	1,00	-	2,40	
14,00	4,00	9,20	1,00	-	2,80	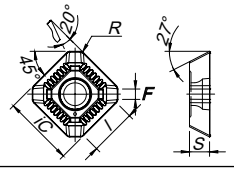
12,70	4,76	-	0,80	-	-	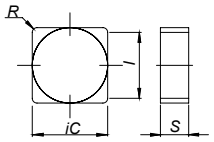
12,70	4,76	-	1,20	-	-	
19,05	4,76	-	1,20	-	-	
19,05	4,76	-	1,60	-	-	
12,70	4,76	-	-	1,50	0,80	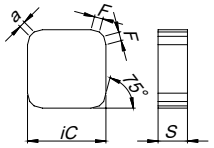
12,70	4,76	-	-	1,50	0,80	
12,70	4,76	11,10	0,40	-	-	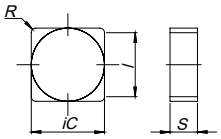
12,70	4,76	11,10	0,80	-	-	
12,70	4,76	11,10	1,20	-	-	
19,05	6,35	-	1,20	-	-	
9,53	3,18	-	1,20	-	-	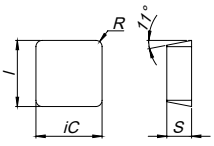
9,53	3,18	-	1,60	-	-	
12,70	3,18	-	0,80	-	-	
12,70	3,18	-	1,20	-	-	
12,70	4,76	-	0,80	-	-	
12,70	4,76	-	1,20	-	-	
15,88	4,76	-	0,80	-	-	
15,88	4,76	-	1,20	-	-	
12,70	3,18	12,70	-	1,00	1,50	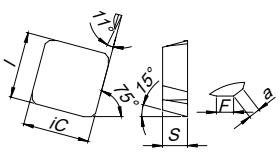
12,70	3,18	12,70	-	1,00	1,50	
12,70	3,18	12,70	-	1,00	1,50	
12,70	4,76	12,70	-	1,00	1,50	
12,70	4,76	12,70	-	1,00	1,50	
12,70	4,76	12,70	-	1,00	1,50	

MILLING INSERTS OVERVIEW

Inserts Pastilhas Plaquitas	(1) Geometry code	ISO Reference	(2) Grade code	P							M			K								
				PVD							PVD			CVD		PVD					UNC	
				M6	54	68	66	78	86	I5	68	66	I5	L5	L9	D2	54	68	67	I5	17	
				PH6103	PH6910	PH6920	PH6930	PH6125	PH6135	PH6740	PH6920	PH6930	PH6740	PH5705	PH5740	PH6705	PH6910	PH6920	PH6325	PH6740	PH0325	
	1110336	SPKN 1504 EDER				◈		◈										◈				
	1110337	SPKN 1504 EDFR				○												○			◈	
	1110339	SPKN 1504 EDSR				◈				◈								◈		◈		
	1110340	SPKN 1504 EDTR				◈		◈		◈								◈		◈		
	1110335	SPKN 1504 EDEL				○												○				
	1110338	SPKN 1504 EDSL				○												○				
	1111976	SPKR 1203 EDTR				○												○				
	1110564	SPKR 1504 EDFR				○												○				
	1111449	SPKR 1504 EDSR				○												○				
	1111107	SPKR 1906				○												○				
	1111195	SPKT 130510-E				◈												◈				
	1111153	SPKW 130510 F			○	○											○	○				
	1111355	SPKW 130510-E				◈												◈				
	1110888	SPKW 130510-S				◈												◈				
	1191186	SPXN 1906				○			○	○					○			○				
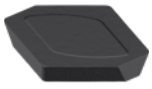	1112384	SPXN 1906-W				○												○				
	1112134	SPXR 1203 EDSR-MP				◈				◈								◈		◈		
	1110393	TNHF 1204 AN-CA												◈	◈	◈	◈	○				
	1111333	TNHF 1204 AN-K												◈	◈			◈				

◈ First choice | Primeira opção | 1ª opción ◈ Stock item | Produto de stock | Itens de stock ○ Available under request (see page A-7) | Disponível sobre consulta (consulte a página A-7) | Disponible bajo consulta (mire pagina A-7)

Insert order code = (1) Geometry Code + (2) Grade Code

Dimensions (mm) | Dimensões (mm) | Dimensiones (mm)						Drawing
ic	S	l	R	a	F	
15,88	4,76	15,88	-	1,00	1,50	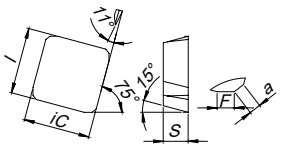
15,88	4,76	15,88	-	1,00	1,50	
15,88	4,76	15,88	-	1,00	1,50	
15,88	4,76	15,88	-	1,00	1,50	
15,88	4,76	15,88	-	1,00	1,50	
15,88	4,76	15,88	-	1,00	1,50	
12,70	3,18	12,70	-	1,00	1,40	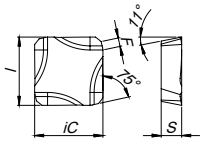
15,88	4,76	15,88	-	1,00	1,40	
15,88	4,76	15,88	-	1,00	1,40	
19,05	6,35	19,05	-	1,00	1,40	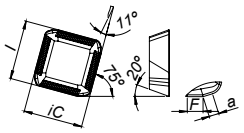
13,00	5,56	-	1,00	-	-	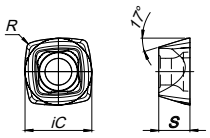
13,00	5,56	-	1,00	-	-	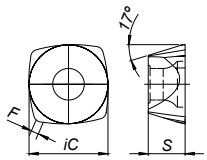
13,00	5,56	-	1,00	-	-	
19,05	6,35	19,05	-	1,00	1,40	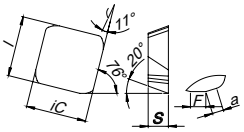
19,05	6,35	-	-	-	12,00	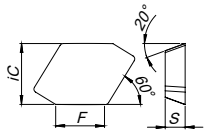
12,70	3,18	12,70	1,00	1,00	1,37	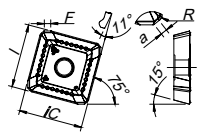
12,70	4,76	12,00	2,00	-	1,70	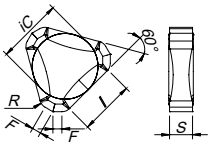
12,70	4,76	12,00	3,00	-	1,30	

MILLING INSERTS OVERVIEW

Inserts Pastilhas Plaquitas	(1) Geometry code	ISO Reference	P								M			K							
			PVD						CVD		PVD			CVD		PVD					UNC
		(2) Grade code	54	68	G4	66	I5	G6	L8	L9	68	66	I5	L5	L9	54	68	67	I5	17
			PH6910	PH6920	PH7920	PH6930	PH6740	PH7740	PH5125	PH5740	PH6920	PH6930	PH6740	PH5705	PH5740	PH6910	PH6920	PH6325	PH6740	PH0325
	1111911	TNJN 1204 ANEN		○													○			
	1110422	TPGN 110304		○													○			
	1110423	TPGN 110308		○													○			
	1110425	TPGN 160304		◎													◎			
	1110426	TPGN 160308		◎													◎			
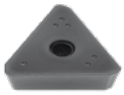	1110450	TPKN 1603 PDEL		○													○			
	1110451	TPKN 1603 PDER		◎			◎										◎		◎	
	1110671	TPKN 1603 PDSR		○													○			
	1110455	TPKN 1603 PDTR		◎			◎										◎		◎	
	1110459	TPKN 1603 PPFN		○													○			
	1110463	TPKN 1603 PPTR		○													○			
	1110465	TPKN 2204 PDER		◎			◎										◎		◎	
	1110466	TPKN 2204 PDFR		○													○			◎
	1110609	TPKN 2204 PDSR		◎			◎										◎		◎	
	1110471	TPKN 2204 PPSR		○													○			
	1110468	TPKN 2204 PDTR		○													○			
	1110476	TPKR 1603 PDSR		◎			◎										◎		◎	
	1110477	TPKR 2204 PDSR		◎			◎										◎		◎	
	1120761	TPUN 110304			○															
	1120762	TPUN 110308			○															
	1120765	TPUN 160304			◎			○	◎	◎										
	1120766	TPUN 160308			◎			◎	◎	◎										
	1120770	TPUN 160312			○			○	◎	◎										
	1120777	TPUN 220404			○			○	◎	◎										
	1120779	TPUN 220408			○			◎	◎	◎										
	1120783	TPUN 220412			○			◎	◎	◎										
	1120791	TPUN 270616							○											
	1112135	TPXR 2204 PDSR-MP		◎			◎										◎		◎	

◎ First choice | Primeira opção | 1ª opción ◎ Stock item | Produto de stock | Itens de stock ○ Available under request (see page A-7) | Disponível sobre consulta (consulte a página A-7) | Disponible bajo consulta (mire pagina A-7)

Insert order code = (1) Geometry Code + (2) Grade Code

Dimensions (mm) | Dimensões (mm) | Dimensiones (mm)						Drawing
ic	S	l	R	a	F	
12,70	4,76	12,00	-	-	2,50	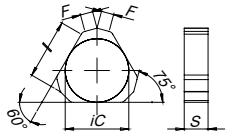
6,35	3,18	-	0,40	-	-	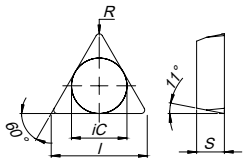
6,35	3,18	-	0,40	-	-	
9,53	3,18	-	0,40	-	-	
9,53	3,18	-	0,80	-	-	
9,53	3,18	16,50	0,70	-	1,20	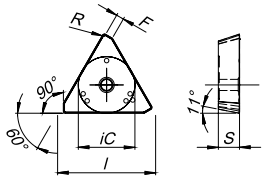
9,53	3,18	16,50	0,70	-	1,40	
9,53	3,18	16,50	0,70	-	1,20	
9,53	3,18	16,50	0,70	-	1,40	
9,53	3,18	16,50	-	-	1,10	
9,53	3,18	16,50	-	-	1,10	
12,70	4,76	22,00	0,50	-	1,70	
12,70	4,76	22,00	0,50	-	1,70	
12,70	4,76	22,00	0,50	-	1,70	
12,70	4,76	22,00	-	-	1,40	
12,70	4,76	22,00	-	-	1,40	
9,53	3,18	16,50	0,60	-	1,20	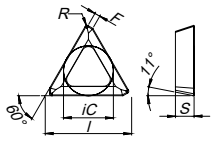
12,70	4,76	22,00	0,50	-	1,70	
6,35	3,18	11,00	0,40	-	-	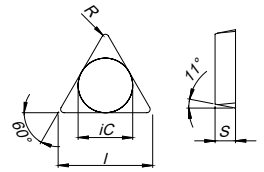
6,35	3,18	11,00	0,80	-	-	
9,53	3,18	16,50	0,40	-	-	
9,53	3,18	16,50	0,80	-	-	
9,53	3,18	16,50	1,20	-	-	
12,70	4,76	22,00	0,40	-	-	
12,70	4,76	22,00	0,80	-	-	
12,70	4,76	22,00	1,20	-	-	
15,88	6,35	27,00	1,60	-	-	
12,70	4,76	22,00	1,00	-	1,70	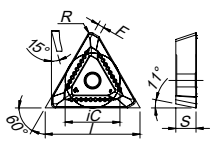

MILLING INSERTS OVERVIEW

Inserts Pastilhas Plaquitas	(1) Geometry code	ISO Reference	P							M			K								UNC
			PVD							PVD			CVD		PVD						
		(2) Grade code	M6	54	68	66	78	86	I5	68	66	I5	L5	L9	D2	54	68	67	I5	17
			PH6103	PH6910	PH6920	PH6930	PH6125	PH6135	PH6740	PH6920	PH6930	PH6740	PH5705	PH5740	PH6705	PH6910	PH6920	PH6325	PH6740	PH0325
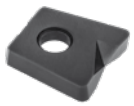	1110851	WPB 08	○	○	○											○	○			
	1110852	WPB 10	○	○	○											○	○			
	1110853	WPB 12	○	○	○											○	○			
	1110923	WPB 16	○	○	○											○	○			
	1111019	WPB 20	○	○	○											○	○			
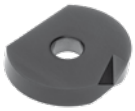	1111554	WPRX-2 08		○	○											○	○			
	1111331	WPRX-2 10		◎	◈											◎	◈			
	1111555	WPRX-2 12		◎	◈											◎	◈			
	1111329	WPRX-2 16		◎	◈											◎	◈			
	1111330	WPRX-2 20		◎	◈											◎	◈			
	1111556	WPRX-2 25		◎	◈											◎	◈			
	1111557	WPRX-2 32		◎	◈											◎	◈			
	1110820	WPV 08	○	○	○											○	○			
	1110821	WPV 10	○	○	○											○	○			
	1110822	WPV 12	○	○	○											○	○			
	1110948	WPV 16	○	○	○											○	○			
	1111020	WPV 20	○	○	○											○	○			
	1110543	WPZ 08	◎	○	○											○	○			
	1110551	WPZ 10	◎	○	○											○	○			
	1110552	WPZ 12	◎	○	○											○	○			
	1110544	WPZ 16	◈	◎	○											○	○			
	1110553	WPZ 20	◈	◎	○											○	○			
	1110661	WPZ 25	◈	◎	○											○	○			
	1110662	WPZ 32	◈	◎	○											○	○			
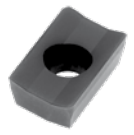	1110910	XPHT 1604 PDTR			○												○			
	1111206	XPHT 160420 PPTR			○												○			
	1110926	XPHT 160432 PDSR			○												○			
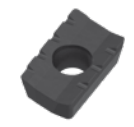	1110958	XPHT 160412-MR			○												○			

◎ First choice | Primeira opção | 1ª opción ◈ Stock item | Produto de stock | Itens de stock ○ Available under request (see page A-7) | Disponível sobre consulta (consulte a página A-7) | Disponible bajo consulta (mire pagina A-7)

Insert order code = (1) Geometry Code + (2) Grade Code

Dimensions (mm) | Dimensões (mm) | Dimensiones (mm)						Drawing
ic	S	I	R	a	F	
8,00	2,00	9,50	0,60	4,00	-	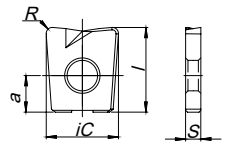
10,00	2,50	11,50	0,80	5,00	-	
12,00	2,50	14,00	1,00	6,00	-	
16,00	3,00	16,00	1,30	6,00	-	
20,00	3,00	20,00	1,60	6,00	-	
8,00	2,00	9,50	-	2,50	-	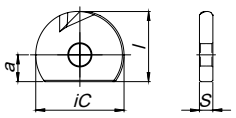
10,00	2,50	11,50	-	5,00	-	
12,00	2,50	11,90	-	6,00	-	
16,00	3,00	13,90	-	6,00	-	
20,00	3,00	15,90	-	6,00	-	
25,00	4,00	21,30	-	9,00	-	
32,00	5,00	25,80	-	10,00	-	
8,00	2,00	9,50	0,60	4,00	-	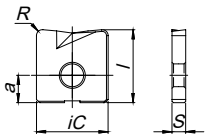
10,00	2,50	11,50	0,80	5,00	-	
12,00	2,50	14,00	1,00	6,00	-	
16,00	3,00	16,00	1,30	6,00	-	
20,00	3,00	20,00	1,60	6,00	-	
8,00	2,40	7,00	-	3,00	-	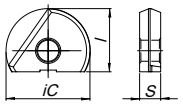
10,00	2,60	8,50	-	3,50	-	
12,00	3,00	10,00	-	4,00	-	
16,00	4,00	12,00	-	4,00	-	
20,00	5,00	15,00	-	5,00	-	
25,00	6,00	18,50	-	6,00	-	
32,00	7,00	23,50	-	7,50	-	
9,53	4,75	16,00	1,20	-	1,70	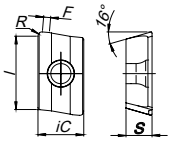
9,53	4,75	16,00	2,00	-	0,70	
9,53	4,75	16,00	3,20	-	-	
9,53	4,75	16,00	1,20	-	1,70	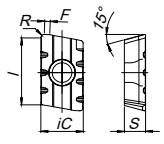

PLUS 28088

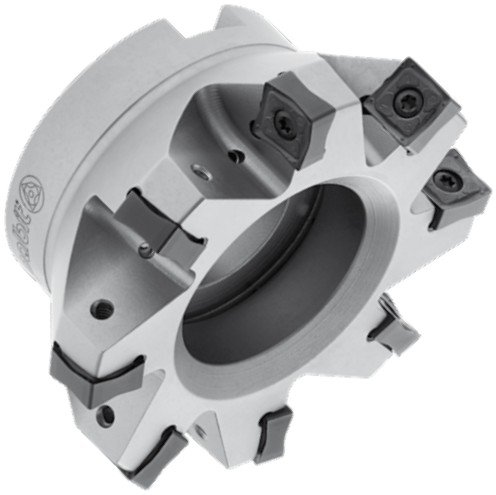

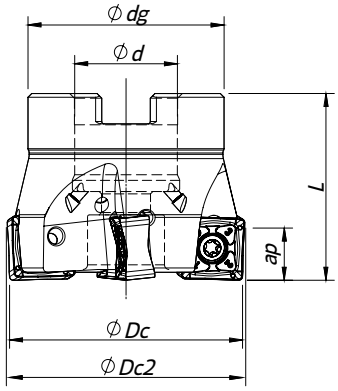

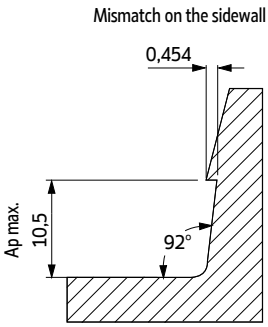

Arbor Mounting

K_r=88° | γ_p=-6°

Order code Código	Reference Referência Referencia		Dimensions | Dimensões | Dimensiones (mm)					Kg	Specifications		Insert Pastilha Inserto	Stock
			ØDc	ØDc2	Ød	Ødg	L		Arbor Type	Ap max (mm)		
181084300	050A28088-05-06-022040	5	50	50,9	22	42	40	0,4	A	10,5	SN... 1206...	◈
181091600	063A28088-06-06-022040	6	63	63,9	22	48	40	0,5	A	10,5	SN... 1206...	◈
181091700	080A28088-07-06-027050	7	80	80,9	27	60	50	1,0	A	10,5	SN... 1206...	◈
181091800	080A28088-09-06-027050	9	80	80,9	27	60	50	0,9	A	10,5	SN... 1206...	◈
181091900	100A28088-08-06-032050	8	100	100,9	32	73	50	1,6	B	10,5	SN... 1206...	◈
181092000	100A28088-11-06-032050	11	100	100,9	32	73	50	1,5	B	10,5	SN... 1206...	◈
181092100	125A28088-10-06-040063	10	125	125,9	40	90	63	3,1	B	10,5	SN... 1206...	◈
181092200	125A28088-14-06-040063	14	125	125,9	40	90	63	3,0	B	10,5	SN... 1206...	◈
181092300	160A28088-12-06-U040063	12	160	160,9	40	110	63	3,7	C	10,5	SN... 1206...	◈
181092700	160A28088-18-06-U040063	18	160	160,9	40	110	63	3,5	C	10,5	SN... 1206...	◈
181092800	200A28088-14-06-U060063	14	200	200,9	60	172	63	6,3	C	10,5	SN... 1206...	◈
181092900	200A28088-22-06-U060063	22	200	200,9	60	172	63	6,1	C	10,5	SN... 1206...	◈

◈ Stock item | Produto de stock | Itens de stock

◯ Available under request (see page A-6) | Disponível sobre consulta (consulte a página A-6) | Disponible bajo consulta (mire pagina A-6)

SPARE PARTS | Complementos | Repuestos

Cutter ØDc	Insert Screw	Key (Torx)	Order separately Key (Torx - Nm)	Torque Value	Order separately Screw	DIN 6368 Wrench
A28088 - 50 - 80	P0401200	XT15	DT1530	3,0	-	-
A28088 - 100	P0401200	PT15	DT1530	3,0	J0164110	SD6368-16
A28088 - 125	P0401200	PT15	DT1530	3,0	J0204610	SD6368-20
A28088 - 160 - 200	P0401200	PT15	DT1530	3,0	-	-

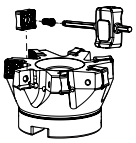

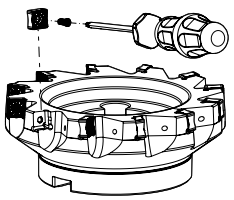

Note: The toolholder is supplied with the XT/PT key. To order the DT key please check the page A-243.
Check the procedures for the clamping screws on the page A-243.

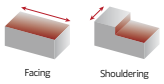

SNH(K)U 1206 | Inserts | Pastilhas | Plaquitas

SNHU-LP

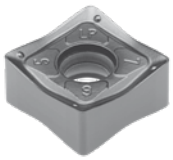

SNKU-LP
(PHS grade)

NEW

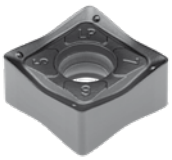

PHS
NEW
GRADE

SNH(K)U-LP

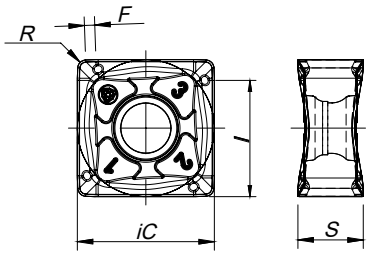

		P					M				K							N		S	H	Dimensions Dimensões Dimensiones (mm)				
		CVD	PVD				CVD	PVD			CVD			PVD				UNC	PCD	PVD	PVD					
	(2) Grade code	T9	G1	G4	P3	G6	R1	G4	P3	G6	L5	L6	L9	G1	G4	P3	G6	10	D6	P3	P7					
(1) Geometry code	ISO Reference	PHS740	PH7910	PH7920	PH7930	PH7740	PHM740	PH7920	PH7930	PH7740	PH5705	PH5320	PH5740	PH7910	PH7920	PH7930	PH7740	PH0910	PDP410	PH7930	PH7603	iC	S	l	R	F
1112020	SNHU 120608 ZNER-LP			●	◉	◉			●	◉	●		◉									13,30	6,35	11,60	0,80	1,00
NEW 1112278	SNKU 120608 ZNER-LP	◉		●	◉	◉			●	◉	●		◉									13,30	6,35	11,60	0,80	1,00

● First choice | Primeira opção | 1ª opción ◉ Stock item | Produto de stock | Itens de stock ○ Available under request (see page A-7) | Disponível sobre consulta (consulte a página A-7) | Disponible bajo consulta (mire pagina A-7)

Insert order code = (1) Geometry Code + (2) Grade Code

GRADES SELECTION GUIDE | Guia para selecção de graus | Tabla para selección de calidades

ISO	PSM	Material	HB (Brinell)	Grades ← Wear Resistance Toughness → PH5705	PH7920	PH7930	PH5740	PHS740	PH7740
P	1	Unalloyed Steel	125-220		✓	✓		✓	✓
	2	Low-Alloyed Steel	220-280		✓	✓		✓	✓
	3	High-Alloyed Steel	280-380		✓	✓		✓	✓
M	4	SS - Ferritic / Martensitic	200-330			✓			✓
	5	SS - Austenitic	200-330			✓			✓
	6	SS - Austenitic-ferritic (Duplex)	230-260			✓			✓
K	7	Malleable Cast Iron	130-230	✓			✓		
	8	Grey Cast Iron	180-245	✓			✓		
	9	Nodular Cast iron	160-250	✓			✓		

● Good Conditions
◉ Average Conditions
◉ Difficult Conditions

page A-236 page A -244

PLUS 28088

RECOMMENDED CUTTING CONDITIONS | Condições de corte recomendadas | Condiciones de corte recomendables

ISO	PSM	Material	HB (Brinell)	Vc (m/min) ← Wear Resistance		
				PH5705	PH7920	PH7930
P	1	Unalloyed Steel	125-220	-	180 **(250)** 320	-
	2	Low-Alloyed Steel	220-280	-	140 **(180)** 250	-
	3	High-Alloyed Steel	280-380	-	130 **(180)** 220	-
M	4	SS - Ferritic / Martensitic	200-330	-	-	140 **(170)** 190
	5	SS - Austenitic	200-330	-	-	120 **(140)** 170
	6	SS - Austenitic-ferritic (Duplex)	230-260	-	-	100 **(120)** 150
K	7	Malleable Cast Iron	130-230	160 **(180)** 295	-	-
	8	Grey Cast Iron	180-245	170 **(270)** 340	-	-
	9	Nodular Cast iron	160-250	120 **(150)** 200	-	-

(Note 1) The above table indicates the cutting conditions of 70% of the tool engagement.
(Note 2) With low workspace clamping rigidity or long overhang of the tool, adjust cutting speed and feed to 70 or 80% of the recommended conditions above.
(Note 3) Surface finishing is determinated by speed/feed used.
(Note 4) PH5... and PHS... can be used wet or dry. PH7... use only air.

Selection Example:

ISO	PSM	Material	HB (brinell)	Vc (m/min) ← Wear Resistance — Toughness →		Feed f_z (mm/t)
				PH5705	PH5740	SNHU 1206... SNKU 1206...
K	7	Malleable cast iron	130-230	160 **(180)** 295	140 **(160)** 250	0,10 **(0,25)** 0,35
	8	Grey cast iron	180-245	170 **(270)** 340	145 **(180)** 280	0,10 **(0,25)** 0,35
	9	Nodular cast iron	160-250	120 **(150)** 200	105 **(150)** 170	0,10 **(0,25)** 0,35

This example shows the recommended starting cutting conditions, indicated in **Bold type**.

Vc (m/min) Toughness →			Feed fz (mm/t)
PH5740	PHS740	PH7740	SNH(K)U 1206...
-	140 **(170)** 190	150 **(180)** 200	0,10 **(0,25)** 0,35
-	120 **(140)** 170	130 **(150)** 180	0,10 **(0,25)** 0,35
-	100 **(120)** 150	110 **(130)** 160	0,10 **(0,25)** 0,35
-	-	130 **(150)** 170	0,10 **(0,25)** 0,35
-	-	100 **(130)** 160	0,10 **(0,25)** 0,35
-	-	80 **(100)** 140	0,10 **(0,25)** 0,35
140 **(160)** 250	-	-	0,10 **(0,25)** 0,35
145 **(180)** 280	-	-	0,10 **(0,25)** 0,35
105 **(150)** 170	-	-	0,10 **(0,25)** 0,35

page A-236
page A -244

PLUS 90260



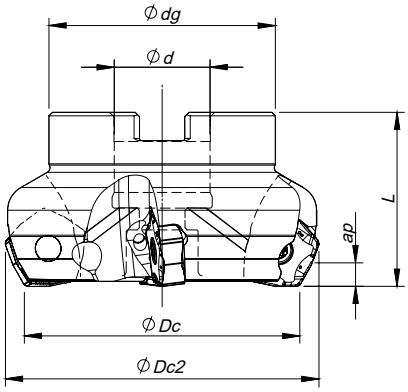

Arbor Mounting

K_r=60° | γ_p -7°

Order code Código	Reference Referência Referencia		Dimensions | Dimensões | Dimensiones (mm)					Kg	Specifications		Insert Pastilha Inserto	Stock
			ØDc	ØDc2	Ød	Ødg	L		Arbor Type	Ap max (mm)		
181050200	050A90260-05-07-022040	5	50	59,05	22	48	40	0,388	A	5,0	PN... 1105...	◎
181050300	063A90260-06-07-022040	6	63	72,05	22	52	40	0,597	A	5,0	PN... 1105...	◎
181050400	080A90260-08-07-027050	8	80	89,05	27	60	50	1,072	B	5,0	PN... 1105...	◎
181045900	100A90260-10-07-032050	10	100	109,05	32	80	50	1,745	B	5,0	PN... 1105...	◎
181050500	125A90260-12-07-040063	12	125	134,05	40	90	63	3,047	B	5,0	PN... 1105...	◎
181050600	160A90260-14-07-U040063	14	160	169,05	40	110	63	4,397	C	5,0	PN... 1105...	◎

◎ Stock item | Produto de stock | Itens de stock

○ Available under request (see page A-6) | Disponível sobre consulta (consulte a página A-6) | Disponible bajo consulta (mire pagina A-6)

SPARE PARTS | Complementos | Repuestos

Cutter ØDc	Insert Screw	Key (Torx)	Order separately Key (Torx - Nm)	Torque Value	Order separately Screw	DIN 6368 Wrench
A90260 – 50 - 63	P0401200	XT15	DT1530	3,0	-	-
A90260 – 80	P0401200	XT15	DT1530	3,0	J0123510	SD6368-12
A90260 – 100	P0401200	PT15	DT1530	3,0	J0164110	SD6368-16
A90260 – 125	P0401200	PT15	DT1530	3,0	J0204610	SD6368-20
A90260 – 160	P0401200	PT15	DT1530	3,0	-	-

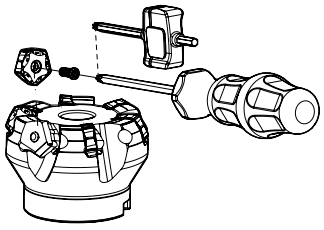

Note: The toolholder is supplied with the XT/PT key. To order the DT key please check the page A-243.
Check the procedures for the clamping screws on the page A-243.

page A-236
page A -244

Facing

PNH(K)X 1105 | Inserts | Pastilhas | Plaquitas

PNHX-MK

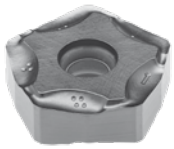

PNHX-HK

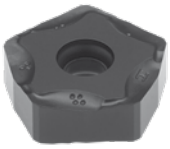

PNKX-MK



PNH(K)X-MK | HK

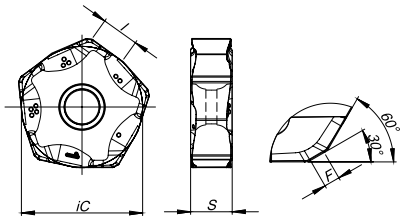

		P						M			K							N		S		H	Dimensions Dimensões Dimensiones (mm)				
		CVD	PVD					CVD	PVD		CVD			PVD				UNC	PCD	PVD		PVD					
	(2) Grade code	T9	P7	G1	G4	P3	G6	R1	G4	G6	L5	L6	L9	G1	G4	P3	G6	10	D6	P3	G6	P7					
(1) Geometry code	ISO Reference	PHS740	PH7603	PH7910	PH7920	PH7930	PH7740	PHM740	PH7920	PH7740	PH5705	PH5320	PH5740	PH7910	PH7920	PH7930	PH7740	PH0910	PDP410	PH7930	PH7740	PH7603	iC	S	I	R	F
1111374	PNHX 1105 ZNER-MK			◉	◉		○				◉		◉	◉	◉		○						16,50	5,66	5,70	-	1,30
1111998	PNHX 1105 ZNER-HK										◉		○										16,50	5,66	5,70	-	1,30
1112294	PNKX 1105 ZNER-MK			◉	◉						◉		○										16,50	5,66	5,70	-	1,30

◉ First choice | Primeira opção | 1ª opción ◉ Stock item | Produto de stock | Itens de stock ○ Available under request (see page A-7) | Disponível sobre consulta (consulte a página A-7) | Disponible bajo consulta (mire pagina A-7)

Insert order code = (1) Geometry Code + (2) Grade Code

GRADES SELECTION GUIDE | Guia para selecção de graus | Tabla para selección de calidades

ISO	PSM	Material	HB (brinell)	Grades ← Wear Resistance Toughness → PH5705	PH7910	PH7920	PH5740	PH7740
P	1	Unalloyed Steel	125-220		✓	✓		✓
	2	Low-Alloyed Steel	220-280		✓	✓		✓
	3	High-Alloyed Steel	280-380		✓	✓		✓
K	7	Malleable Cast Iron	130-230	✓			✓	
	8	Grey Cast Iron	180-245	✓			✓	
	9	Nodular Cast iron	160-250	✓			✓	

● Good Conditions
● Average Conditions
● Difficult Conditions

page A-236
page A -244

PLUS 90260

RECOMMENDED CUTTING CONDITIONS | Condições de corte recomendadas | Condiciones de corte recomendables

ISO	PSM	Material	HB (Brinell)	Vc (m/min) ← Wear Resistance		
				PH5705	PH7910	PH7920
P	1	Unalloyed Steel	125-220	-	190-280	180-250
	2	Low-Alloyed Steel	220-280	-	180-240	170-210
	3	High-Alloyed Steel	280-380	-	170-220	160-200
K	7	Malleable Cast Iron	130-230	190-340	-	-
	8	Grey Cast Iron	180-245	180-300	-	-
	9	Nodular Cast iron	160-250	140-250	-	-

(Note 1) Cutting conditions a_e/DC=70%.
(Note 2) Cutting conditions should be ajusted according to the machine and work rigidity.
(Note 3) If chattering occurs, reduce ap and Vc by 30% and keep the same fz per tooth.

CHIP-BREAKER SELECTION GUIDE | Guia para aplicações do quebra-aparas | Guía para aplicación del rompevirutas

ISO	PSM	Material	HB (Brinell)	Chip-Breaker Application	
				1st choise	Dificult Operations
P	1	Unalloyed Steel	125-220	PNH(K)X 11... MK	-
	2	Low-Alloyed Steel	220-280	PNH(K)X 11... MK	-
	3	High-Alloyed Steel	280-380	PNH(K)X 11... MK	-
K	7	Malleable Cast Iron	130-230	PNH(K)X 11... MK	PNH(K)X 11... HK
	8	Grey Cast Iron	180-245	PNH(K)X 11... MK	PNH(K)X 11... HK
	9	Nodular Cast iron	160-250	PNH(K)X 11... MK	PNH(K)X 11... HK

Vc (m/min) Toughness →	Feed fz (mm/t)
PH5740	PNH(K)X 1105...
-	0,15-0,30
-	0,15-0,30
-	0,15-0,25
170-300	0,12-0,35
150-260	0,12-0,35
130-220	0,12-0,30

page A-236
page A -244

PLUS 90845



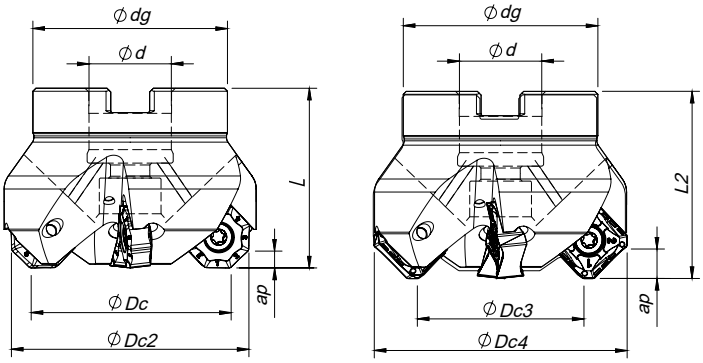

Arbor Mounting

K_r=45° | γ_p=-6°

Order code Código	Reference Referência Referencia		Dimensions | Dimensões | Dimensiones (mm)								Kg	Specifications		Insert Pastilha Inserto	Stock
			ØDc	ØDc2	ØDc3	ØDc4	Ød	Ødg	L	L2		Arbor Type	Ap (mm)		
181111400	050A90845-04-06-022040	4	50	57,6	42,4	47,2	22	48	40	41,5	0,383	A	3,5 | 6,0	ON...05 | SN...12	◉
181117400	050A90845-06-06-022040	6	50	57,6	42,4	47,2	22	48	40	41,5	0,374	A	3,5 | 6,0	ON...05 | SN...12	○
181117500	063A90845-06-06-022040	6	63	70,6	55,4	60,2	22	52	40	41,5	0,525	A	3,5 | 6,0	ON...05 | SN...12	◉
181117600	063A90845-08-06-022040	8	63	70,6	55,4	60,2	22	52	40	41,5	0,517	A	3,5 | 6,0	ON...05 | SN...12	○
181117700	080A90845-07-06-027050	7	80	87,6	72,4	77,2	27	60	50	51,5	0,846	B	3,5 | 6,0	ON...05 | SN...12	◉
181117800	080A90845-10-06-027050	10	80	87,6	72,4	77,2	27	60	50	51,5	0,842	B	3,5 | 6,0	ON...05 | SN...12	○
181117900	100A90845-08-06-032050	8	100	107,6	92,4	97,2	32	80	50	51,5	1,559	B	3,5 | 6,0	ON...05 | SN...12	◉
181120900	100A90845-12-06-032050	12	100	107,6	92,4	97,2	32	80	50	51,5	1,540	B	3,5 | 6,0	ON...05 | SN...12	○
181121000	125A90845-10-06-040063	10	125	132,6	117,4	122,2	40	90	63	64,5	2,890	B	3,5 | 6,0	ON...05 | SN...12	◉
181121100	160A90845-12-06-U040063	12	160	167,6	152,4	157,2	40	110	63	64,5	4,360	C	3,5 | 6,0	ON...05 | SN...12	○
181121200	200A90845-14-06-U060063	14	200	207,6	192,4	197,2	60	172	63	64,5	8,890	C	3,5 | 6,0	ON...05 | SN...12	○
181121300	250A90845-16-06-U060063	16	250	257,6	242,4	247,2	60	172	63	64,5	11,490	C	3,5 | 6,0	ON...05 | SN...12	○

◉ Stock item | Produto de stock | Itens de stock ○ Available under request (see page A-6) | Disponível sobre consulta (consulte a página A-6) | Disponible bajo consulta (mire pagina A-6)



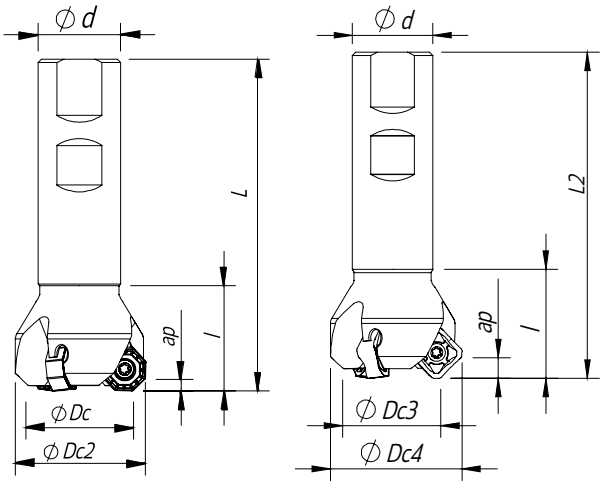

Weldon Shank

K_r=45° | γ_p=-6°

Order code Código	Reference Referência Referencia		Dimensions | Dimensões | Dimensiones (mm)							Kg	Specifications	Insert Pastilha Inserto	Stock
			ØDc	ØDc2	ØDc3	ØDc4	Ød	L	L2		Ap (mm)		
181118000	032W90845-03-06-025100	3	32	39,6	24,4	29,2	25	100	101,5	0,375	3,5 | 6,0	ON...05 | SN...12	◉
181118100	040W90845-04-06-032110	4	40	47,6	32,4	37,2	32	110	111,5	0,653	3,5 | 6,0	ON...05 | SN...12	◉

◉ Stock item | Produto de stock | Itens de stock ○ Available under request (see page A-6) | Disponível sobre consulta (consulte a página A-6) | Disponible bajo consulta (mire pagina A-6)

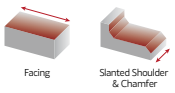

ONH(K)X 05 | SNH(K)X 12 | Inserts | Pastilhas | Plaquitas

ONH(K)X-LP (PHS grade) NEW



ONH(K)X-MP (PHS grade) NEW



ONH(K)X-MK



PHS NEW GRADE

ONH(K)X-LP | MP | MK

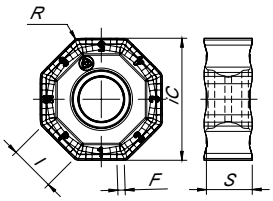

ONHX-W



SNHX-W



ONHX-W

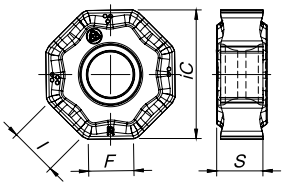

SNHX-W

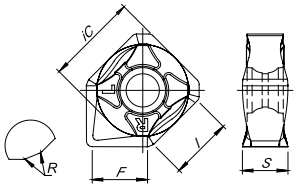

SNH(K)X-LP

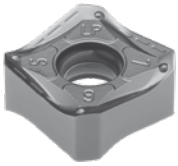

SNH(K)X-MP (PHS grade) NEW

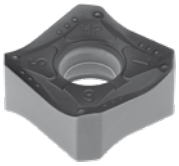

SNH(K)X-MK

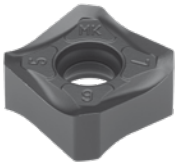

SNHX-LN

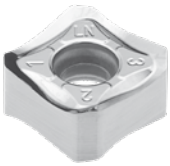

SNH(K)X-LP | MP | MK | LN

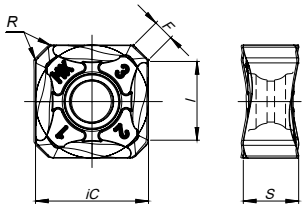

		P						M			K						N		S		H	Dimensions Dimensões Dimensiones (mm)				
		CVD	PVD					CVD	PVD		CVD			PVD			UNC	PCD	PVD		PVD					
	(2) Grade code	T9	P7	G1	G4	P3	G6	R1	P3	G6	L5	L6	L9	G1	G4	G6	10	D6	P3	G6	P7					
(1) Geometry code	ISO Reference	PHS740	PH7603	PH7910	PH7920	PH7930	PH7740	PHM740	PH7930	PH7740	PH5705	PH5320	PH5740	PH7910	PH7920	PH7740	PH0910	PDP410	PH7930	PH7740	PH7603	iC	S	l	R	F
1112302	ONHX 050505 ANEN-LP				●	●	●		●	●									●	●		12,70	5,20	5,30	0,50	-
1112304	ONHX 050505 ANSN-MP				○	○																12,70	5,20	5,30	0,50	-
1112306	ONHX 050500 ANEN-MK											○	○									12,70	5,20	5,30	-	-
NEW 1112301	ONKX 050505 ANEN-LP	●			●	●			●										●			12,70	5,20	5,30	0,50	-
NEW 1112303	ONKX 050505 ANSN-MP	●			●	●																12,70	5,20	5,30	0,50	-
1112305	ONKX 050500 ANEN-MK											●	●									12,70	5,20	5,30	-	-
1112307	ONHX 050500 ANER-W				●						●											12,70	5,20	5,30	-	4,30
1111452	SNHX 1206 ANEN-LP				●	●			●										●			12,70	6,35	9,30	0,80	2,00
NEW 1111502	SNHX 1206 ANSN-MP	●		●	●	●																12,70	6,35	9,30	0,80	2,00
1111503	SNHX 1206 ANEN-MK										●		●	●	●							12,70	6,35	9,30	0,80	2,00
1111504	SNHX 1206 ANFN-LN																●					12,70	6,35	9,30	0,80	2,00
NEW 1112293	SNKX 1206 ANSN-MP	●			●		●															12,70	6,35	9,30	0,80	2,00
1112249	SNKX 1206 ANEN-MK										●	●	●									12,70	6,35	9,30	0,80	2,00
1111899	SNHX 1206 ANFN-W*			●	●									●	●							12,70	6,35	9,30	0,40	7,60

● First choice | Primeira opção | 1ª opción ● Stock item | Produto de stock | Itens de stock ○ Available under request (see page A-7) | Disponível sobre consulta (consulte a página A-7) | Disponible bajo consulta (mire pagina A-7)

Insert order code = (1) Geometry Code + (2) Grade Code

* Wiper insert with 2 rights and 2 left-hand cutting edges.

page A-236 page A -244

PLUS 90845

SPARE PARTS | Complementos | Repuestos

Cutter ØDc	Insert Screw	Key (Torx)	Order separately Key (Torx - Nm)	Torque Value	Order separately Screw	DIN 6368 Wrench
A90845 – 50 - 63	P0401200	XT15	DT1530	3,0	-	-
A90845 – 80	P0401200	XT15	DT1530	3,0	J0123510	SD6368-12
A90845 – 100	P0401200	PT15	DT1530	3,0	J0164110	SD6368-16
A90845 – 125	P0401200	PT15	DT1530	3,0	J0204610	SD6368-20
A90845 – 160 - 250	P0401200	PT15	DT1530	3,0	-	-
W90845 - 32 - 40	P0401200	XT15	DT1530	3,0	-	-

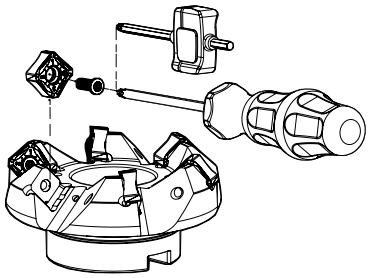

Note: The toolholder is supplied with the XT/PT key. To order the DT key please check the page A-243.
Check the procedures for the clamping screws on the page A-243.

GRADES SELECTION GUIDE | Guia para selecção de graus | Tabla para selección de calidades

ISO	PSM	Material	HB (Brinell)	Grades ← Wear Resistance — Toughness → PH0910	PH5705	PH5320	PH7910	PH7920	PH7930	PH5740	PHS740	PH7740
P	1	Unalloyed Steel	125-220				✓	✓	✓		✓	✓
	2	Low-Alloyed Steel	220-280				✓	✓	✓		✓	✓
	3	High-Alloyed Steel	280-380				✓	✓	✓		✓	✓
M	4	SS - Ferritic / Martensitic	200-330						✓			✓
	5	SS - Austenitic	200-330						✓			✓
	6	SS - Austenitic-ferritic (Duplex)	230-260						✓			✓
K	7	Malleable Cast Iron	130-230		✓	✓	✓	✓		✓		
	8	Grey Cast Iron	180-245		✓	✓	✓	✓		✓		
	9	Nodular Cast iron	160-250		✓	✓	✓	✓		✓		
N	10	Aluminium and Non Ferrous	30-130	✓								
S	11	Heat Resistant Super Alloys	200-320						✓			✓

Good Conditions Average Conditions Difficult Conditions

RECOMMENDED CUTTING CONDITIONS | Condições de corte recomendadas | Condiciones de corte recomendables

ISO	PSM	Material	HB (Brinell)	Vc (m/min) ← Wear Resistance				Toughness →
				PH0910	PH5705	PH5320	PH7910	PH7920
P	1	Unalloyed Steel	125-220	-	-	-	190-280	180-250
	2	Low-Alloyed Steel	220-280	-	-	-	180-240	170-210
	3	High-Alloyed Steel	280-380	-	-	-	170-220	160-200
M	4	SS - Ferritic / Martensitic	200-330	-	-	-	-	-
	5	SS - Austenitic	200-330	-	-	-	-	-
	6	SS - Austenitic-ferritic (Duplex)	230-260	-	-	-	-	-
K	7	Malleable Cast Iron	130-230	-	190-340	180-320	180-320	170-300
	8	Grey Cast Iron	180-245	-	180-300	170-280	170-280	150-250
	9	Nodular Cast iron	160-250	-	140-250	130-250	100-240	90-210
N	10	Aluminium and Non Ferrous	30-130	350-1200	-	-	-	-
S	11	Heat Resistant Super Alloys	200-320	-	-	-	-	-

ISO	PSM	Material	HB (Brinell)	Vc (m/min) ← Wear Resistance			Toughness →	Feed fz (mm/t)	
				PH7930	PH5740	PHS740	PH7740	SNH(K)X 12...	ONH(K)X 05...
P	1	Unalloyed Steel	125-220	160-220	-	140-170	140-170	0,10-0,35	0,10-0,35
	2	Low-Alloyed Steel	220-280	150-180	-	130-160	130-160	0,10-0,35	0,10-0,35
	3	High-Alloyed Steel	280-380	130-160	-	110-140	110-140	0,10-0,30	0,10-0,30
M	4	SS - Ferritic / Martensitic	200-330	120-180	-	-	-	0,10-0,30	0,10-0,30
	5	SS - Austenitic	200-330	100-160	-	-	-	0,10-0,30	0,10-0,30
	6	SS - Austenitic-ferritic (Duplex)	230-260	70-140	-	-	-	0,10-0,25	0,10-0,25
K	7	Malleable Cast Iron	130-230	160-280	170-300	-	130-250	0,10-0,35	0,10-0,35
	8	Grey Cast Iron	180-245	140-240	150-260	-	110-220	0,10-0,35	0,10-0,35
	9	Nodular Cast iron	160-250	90-200	130-220	-	80-170	0,10-0,30	0,10-0,30
N	10	Aluminium and Non Ferrous	30-130	-	-	-	-	0,10-0,35	-
S	11	Heat Resistant Super Alloys	200-320	30-75	-	-	-	0,07-0,20	0,07-0,18

(Note 1) Cutting conditions a_e/Dc=70%.
(Note 2) It's possible to occur vibrations in certain cases. Please reduce depth of cut and / or reduce cutting conditions in following cases:
- When using long shank;
- When using long tool overhang with arbor type;
- When application has poor clamping rigidity or when using a low rigidity machine.

(Note 3) PH5... and PHS... can be used wet or dry. PH7... use only air.

CHIP-BREAKER SELECTION GUIDE | Guia para aplicações do quebra-aparas | Guía para aplicación del rompevirutas

ISO	PSM	Material	HB (Brinell)	Chip-Breaker Application	
				1st choise	Dificult Operations
P	1	Unalloyed Steel	125-220	LP	MP
	2	Low-Alloyed Steel	220-280	LP	MP
	3	High-Alloyed Steel	280-380	MP	-
M	4	SS - Ferritic / Martensitic	200-330	LP	MP
	5	SS - Austenitic	200-330	LP	-
	6	SS - Austenitic-ferritic (Duplex)	230-260	LP	-
K	7	Malleable Cast Iron	130-230	MK	-
	8	Grey Cast Iron	180-245	MK	-
	9	Nodular Cast iron	160-250	MK	-
N	10	Aluminium and Non Ferrous	30-130	LN	-
S	11	Heat Resistant Super Alloys	200-320	LP	-

page A-236 page A -244

PLUS 90945



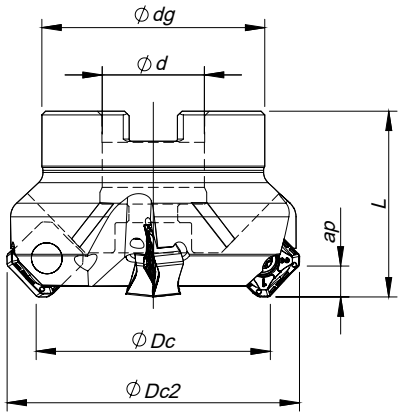

Arbor Mounting

K_r=45° | γ_p=-6°

Order code Código	Reference Referência Referencia		Dimensions | Dimensões | Dimensiones (mm)					Kg	Specifications		Insert Pastilha Inserto	Stock
			ØDc	ØDc2	Ød	Ødg	L		Arbor Type	Ap max (mm)		
181048200	050A90945-04-06-022040	4	50	63	22	48	40	0,424	A	6,0	SN... 1206	◉
181067000	050A90945-06-06-022040	6	50	63	22	48	40	0,415	A	6,0	SN... 1206	◉
181048300	063A90945-06-06-022040	6	63	76	22	52	40	0,575	A	6,0	SN... 1206	◉
181067100	063A90945-08-06-022040	8	63	76	22	52	40	0,577	A	6,0	SN... 1206	◉
181048400	080A90945-07-06-027050	7	80	93	27	60	50	0,966	B	6,0	SN... 1206	◉
181067200	080A90945-10-06-027050	10	80	93	27	60	50	0,950	B	6,0	SN... 1206	◉
181048500	100A90945-08-06-032050	8	100	113	32	80	50	1,667	B	6,0	SN... 1206	◉
181067300	100A90945-12-06-032050	12	100	113	32	80	50	1,650	B	6,0	SN... 1206	◉
181048600	125A90945-10-06-040063	10	125	138	40	90	63	2,890	B	6,0	SN... 1206	◉
181048700	160A90945-12-06-U040063	12	160	173	40	110	63	4,360	C	6,0	SN... 1206	◉
181052800	200A90945-14-06-U060063	14	200	213	60	172	63	8,890	C	6,0	SN... 1206	◉
181064700	250A90945-16-06-U060063	16	250	263	60	172	63	11,490	C	6,0	SN... 1206	◉

◉ Stock item | Produto de stock | Itens de stock

○ Available under request (see page A-6) | Disponível sobre consulta (consulte a página A-6) | Disponible bajo consulta (mire pagina A-6)

SPARE PARTS | Complementos | Repuestos

Cutter ØDc	Insert Screw	Key (Torx)	Order separately Key (Torx - Nm)	Torque Value	Order separately Screw	DIN 6368 Wrench
A90945 – 50 - 63	P0401200	XT15	DT1530	3,0	-	-
A90945 – 80	P0401200	XT15	DT1530	3,0	J0123510	SD6368-12
A90945 – 100	P0401200	PT15	DT1530	3,0	J0164110	SD6368-16
A90945 – 125	P0401200	PT15	DT1530	3,0	J0204610	SD6368-20
A90945 – 160 - 250	P0401200	PT15	DT1530	3,0	-	-

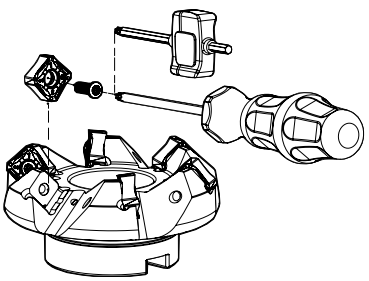

Note: The toolholder is supplied with the XT/PT key. To order the DT key please check the page A-243.
Check the procedures for the clamping screws on the page A-243.

Facing | Slanted Shoulder & Chamfer

SNH(K)X 1206 | Inserts | Pastilhas | Plaquitas

SNH(K)X-LP

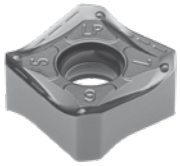

SNH(K)X-MP (PHS grade) NEW

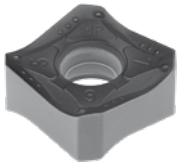

PHS NEW GRADE

SNH(K)X-LP | MP | MK | LN

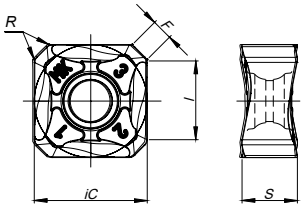

SNH(K)X-MK

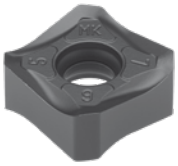

SNHX-LN

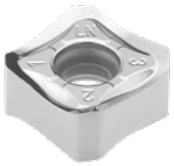

SNHX-W



SNHX-W

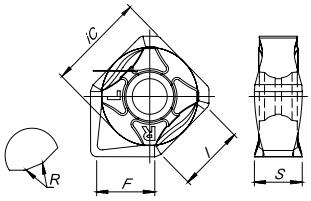

		P						M				K						N		S		H	Dimensions Dimensões Dimensiones (mm)				
		CVD	PVD					CVD	PVD			CVD			PVD			UNC	PCD	PVD		PVD					
	(2) Grade code	T9	P7	G1	G4	P3	G6	R1	G4	P3	G6	L5	L6	L9	G1	G4	P3	10	D6	P3	G6	P7					
	(1) Geometry code	PHS740	PH7603	PH7910	PH7920	PH7930	PH7740	PHM740	PH7920	PH7930	PH7740	PH5705	PH5320	PH5740	PH7910	PH7920	PH7930	PH0910	PDP410	PH7930	PH7740	PH7603	iC	S	I	R	F
NEW	1112293	SNKX 1206 ANSN-MP	◎			◎		◎																12,70	6,35	9,30	0,80	2,00
	1112249	SNKX 1206 ANEN-MK										◎	◎	◎										12,70	6,35	9,30	0,80	2,00
	1111452	SNHX 1206 ANEN-LP				◎	◎			◎						◎	◎			◎				12,70	6,35	9,30	0,80	2,00
NEW	1111502	SNHX 1206 ANSN-MP	◎		◎	◎	◎																	12,70	6,35	9,30	0,80	2,00
	1111503	SNHX 1206 ANEN-MK										◎		◎	◎	◎								12,70	6,35	9,30	0,80	2,00
	1111504	SNHX 1206 ANFN-LN																◎						12,70	6,35	9,30	0,80	2,00
	1111899	SNHX 1206 ANFN-W*			◎	◎									◎	◎								12,70	6,30	9,30	0,40	7,60

◎ First choice | Primeira opção | 1ª opción ◎ Stock item | Produto de stock | Itens de stock ○ Available under request (see page A-7) | Disponível sobre consulta (consulte a página A-7) | Disponible bajo consulta (mire pagina A-7)

Insert order code = (1) Geometry Code + (2) Grade Code

* Wiper insert with 2 rights and 2 left-hand cutting edges.

page A-236 page A -244

PLUS 90945

RECOMMENDED CUTTING CONDITIONS | Condições de corte recomendadas | Condiciones de corte recomendables

ISO	PSM	Material	HB (Brinell)	Vc (m/min) ← Wear Resistance				
				PH0910	PH5705	PH7910	PH7920	PH7930
P	1	Unalloyed Steel	125-220	-	-	190-280	180-250	160-220
	2	Low-Alloyed Steel	220-280	-	-	180-240	170-210	150-180
	3	High-Alloyed Steel	280-380	-	-	170-220	160-200	130-160
M	4	SS - Ferritic / Martensitic	200-330	-	-	-	-	120-180
	5	SS - Austenitic	200-330	-	-	-	-	100-160
	6	SS - Austenitic-ferritic (Duplex)	230-260	-	-	-	-	70-140
K	7	Malleable Cast Iron	130-230	-	190-340	180-320	170-300	160-280
	8	Grey Cast Iron	180-245	-	180-300	170-280	150-250	140-240
	9	Nodular Cast iron	160-250	-	140-250	100-240	90-210	90-200
N	10	Aluminium and Non Ferrous	30-130	350-1200	-	-	-	-
S	11	Heat Resistant Super Alloys	200-320	-	-	-	-	30-75

(Note 1) Cutting conditions $a_e/Dc=70\%$.
(Note 2) It's possible to occur vibrations in certain cases. Please reduce depth of cut and / or reduce cutting conditions in following cases:
- When using long shank;
- When using long tool overhang with arbor type;
- When application has poor clamping rigidity or when using a low rigidity machine.

(Note 3) PH5... and PHS... can be used wet or dry. PH7... use only air.

GRADES SELECTION GUIDE | Guia para selecção de graus | Tabla para selección de calidades

ISO	PSM	Material	HB (Brinell)	Grades ← Wear Resistance — Toughness →							
				PH0910	PH5705	PH7910	PH7920	PH7930	PH5740	PHS740	PH7740
P	1	Unalloyed Steel	125-220			✓	✓	✓		✓	✓
	2	Low-Alloyed Steel	220-280			✓	✓	✓		✓	✓
	3	High-Alloyed Steel	280-380			✓	✓	✓		✓	✓
M	4	SS - Ferritic / Martensitic	200-330					✓			
	5	SS - Austenitic	200-330					✓			
	6	SS - Austenitic-ferritic (Duplex)	230-260					✓			
K	7	Malleable Cast Iron	130-230		✓		✓		✓		
	8	Grey Cast Iron	180-245		✓		✓		✓		
	9	Nodular Cast iron	160-250		✓		✓		✓		
N	10	Aluminium and Non Ferrous	30-130	✓							
S	11	Heat Resistant Super Alloys	200-320					✓			

Good Conditions
Average Conditions
Difficult Conditions

CHIP-BREAKER SELECTION GUIDE | Guia para aplicações do quebra-aparas | Guía para aplicación del rompevirutas

ISO	PSM	Material	HB (Brinell)	Chip-Breaker Application	
				1st choise	Dificult Operations
P	1	Unalloyed Steel	125-220	SNHX 12... LP	SNH(K)X 12... MP
	2	Low-Alloyed Steel	220-280	SNHX 12... LP	SNH(K)X 12... MP
	3	High-Alloyed Steel	280-380	SNH(K)X 12... MP	-
M	4	SS - Ferritic / Martensitic	200-330	SNHX 12... LP	-
	5	SS - Austenitic	200-330	SNHX 12... LP	-
	6	SS - Austenitic-ferritic (Duplex)	230-260	SNHX 12... LP	-
K	7	Malleable Cast Iron	130-230	SNH(K)X 12... MK	-
	8	Grey Cast Iron	180-245	SNH(K)X 12... MK	-
	9	Nodular Cast iron	160-250	SNH(K)X 12... MK	-
N	10	Aluminium and Non Ferrous	30-130	SNHX 12... LN	-
S	11	Heat Resistant Super Alloys	200-320	SNHX 12... LP	-

Vc (m/min) Toughness →			Feed fz (mm/t)				
PH5740	PHS740	PH7740	SNHX 12... LP	SNH(K)X 12... MP	SNH(K)X 12... MK	SNHX 12... LN	SNHX 12... W
-	140-170	140-170	0,10-0,35	0,10-0,35	-	-	0,10-0,35
-	130-160	130-160	0,10-0,35	0,10-0,35	-	-	0,10-0,35
-	110-140	110-140	0,10-0,30	0,10-0,30	-	-	0,10-0,30
-	-	-	0,10-0,30	-	-	-	-
-	-	-	0,10-0,30	-	-	-	-
-	-	-	0,10-0,25	-	-	-	-
170-300	-	130-250	0,10-0,35	-	0,10-0,35	-	0,10-0,40
150-260	-	110-220	0,10-0,35	-	0,10-0,35	-	0,10-0,40
130-220	-	80-170	0,10-0,30	-	0,10-0,30	-	0,10-0,40
-	-	-	-	-	-	0,10-0,35	-
-	-	-	0,07-0,20	-	-	-	-

WIPER INSERTS

Rec. Cutting Conditions:

- F_W at least 40% larger than f_n (f_n-f_2xZ);
- Axial deepth of cut 0,5 - 0,8mm.

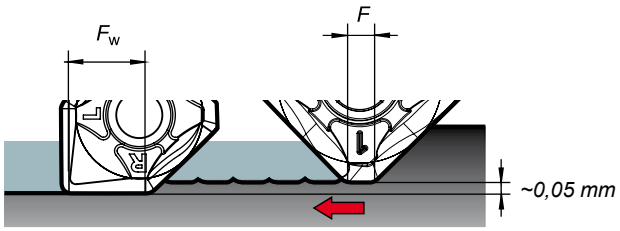

Example:

- The width of the parallel land (F) of the insert is 2,0mm.
- Width a cutter of 10 inserts and using a feed per tooth (f_z) of 0,3mm, i.e. 33% bigger than the parallel land.
- To obtain a good surface finish, the feed per revolution should be a maximum of 80% of 2mm = 1,6mm.
- Then wiper insert will have a parallel land (F_W) with a width of approximately 7,6mm.
- Result: Feed per revolution (f_n) could be increased from 1,6mm to 60% of 7,6mm = 4,56mm.

Note: Other limitations, such a machine power, must be taken into consideration.

How to use a wiper insert:

- Since wiper is one corner use to standard cutters, please attach the insert with the parallel land down to the workspace cutting surface.

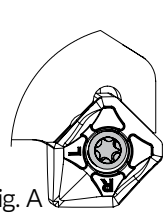
Fig. A

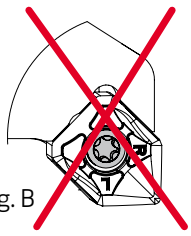
Fig. B

When using wiper insert, install the insert as shown on Fig. A if the insert is installed as shown on Fig. B breakage of the insert is inevitable and normal surface finish can not been obtained.

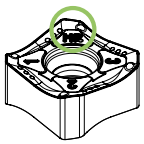

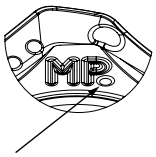

This point shows the SNKX insert difference to SNHX

Put the same side of insert in each pocket for best radial and axial runout when using SNKX.

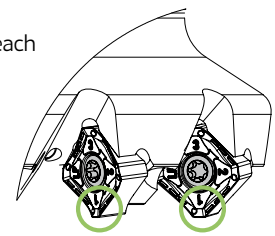

PLUS 91245



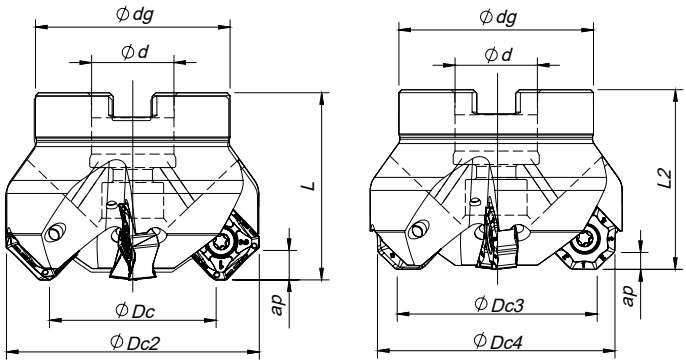

Arbor Mounting

K_r=45° | γ_p=-6°

Order code Código	Reference Referência Referencia		Dimensions | Dimensões | Dimensiones (mm)								Kg	Specifications		Insert Pastilha Inserto	Stock
			ØDc	ØDc2	ØDc3	ØDc4	Ød	Ødg	L	L2		Arbor Type	Ap (mm)		
181088900	063A91245-05-06-022050	5	63	80,1	66,6	76,0	22	52	50	48	0,81	A	8,5|3,8	ON...06|SN...16	◈
181089000	080A91245-06-06-027050	6	80	97,1	83,6	93,0	27	60	50	48	1,06	B	8,5|3,8	ON...06|SN...16	◈
181089100	080A91245-08-06-027050	8	80	97,1	83,6	93,0	27	60	50	48	1,09	B	8,5|3,8	ON...06|SN...16	◈
181089200	100A91245-07-06-032063	7	100	117,1	103,6	113,0	32	80	63	61	2,24	B	8,5|3,8	ON...06|SN...16	◈
181089300	100A91245-10-06-032063	10	100	117,1	103,6	113,0	32	80	63	61	2,28	B	8,5|3,8	ON...06|SN...16	◈
181089400	125A91245-08-06-040063	8	125	142,1	128,6	138,0	40	90	63	61	3,04	B	8,5|3,8	ON...06|SN...16	◈
181089500	160A91245-10-06-U040063	10	160	177,1	163,6	173,0	40	110	63	61	4,40	C	8,5|3,8	ON...06|SN...16	◈
181089600	200A91245-12-06-U060063	12	200	217,1	203,6	213,0	60	172	63	61	9,12	C	8,5|3,8	ON...06|SN...16	◈
181089700	250A91245-14-06-U060063	14	250	267,1	253,6	263,0	60	172	63	61	11,93	C	8,5|3,8	ON...06|SN...16	◈

◈ Stock item | Produto de stock | Itens de stock

◯ Available under request (see page A-6) | Disponível sobre consulta (consulte a página A-6) | Disponible bajo consulta (mire pagina A-6)

SPARE PARTS | Complementos | Repuestos

Cutter ØDc	Insert Screw	Key (Torx)	Order separately Key (Torx - Nm)	Torque Value	Order separately Screw	DIN 6368 Wrench
A91245 - 63	P0451400	XT20	DT2050	5,0	-	-
A91245 - 80	P0451400	XT20	DT2050	5,0	J0123510	SD6368-12
A91245 -100	P0451400	PT20	DT2050	5,0	J0164110	SD6368-16
A91245 -125	P0451400	PT20	DT2050	5,0	J0204610	SD6368-20
A91245 - 160-250	P0451400	PT20	DT2050	5,0	-	-

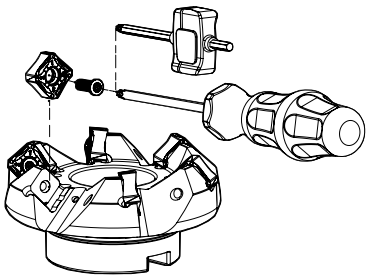

Note: The toolholder is supplied with the XT/PT key. To order the DT key please check the page A-243.
Check the procedures for the clamping screws on the page A-243.

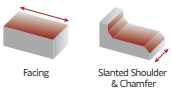

ONH(K)X 0606 | SNH(K)X 1606 | Inserts | Pastilhas | Plaquitas

ONH(K)X-LP

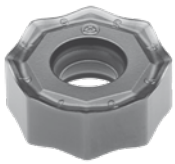

ONH(K)X-MP (PHS grade) NEW

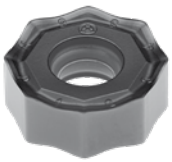

ONH(K)X-MK



PHS NEW GRADE

ONH(K)X-LP | MP | MK

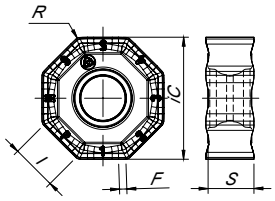

ONHX-W



ONHX-W

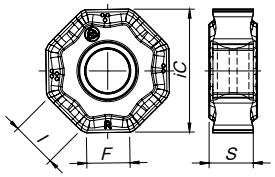

SNH(K)X-LP

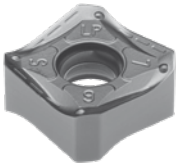

SNH(K)X-MP (PHS grade) NEW

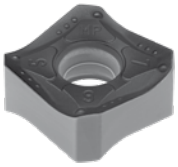

SNH(K)X-MK

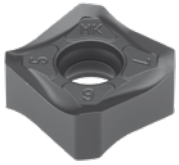

SNH(K)X-LP | MP | MK

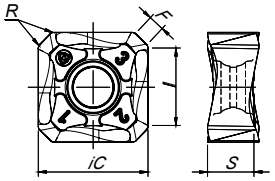

		P					M				K							N		S		H	Dimensions Dimensões Dimensiones (mm)				
		CVD	PVD				CVD	PVD			CVD			PVD				UNC	PCD	PVD		PVD					
	(2) Grade code	T9	G1	G4	P3	G6	R1	G4	P3	G6	L5	L6	L9	G1	G4	P3	G6	10	D6	P3	G6	P7					
(1) Geometry code	ISO Reference	PHS740	PH7910	PH7920	PH7930	PH7740	PHM740	PH7920	PH7930	PH7740	PH5705	PH5320	PH5740	PH7910	PH7920	PH7930	PH7740	PH0910	PDP410	PH7930	PH7740	PH7603	iC	S	l	R	F
1111954	ONHX 0606 ANEN-LP			◈	◈	◈			◈	◈		○			◈	◈	◈						16,50	6,35	6,20	0,80	1,00
1111955	ONHX 0606 ANEN-MP	○		◈		◈																	16,50	6,35	6,20	0,80	1,00
1111956	ONHX 0606 ANEN-MK										◈		◈										16,50	6,35	6,20	0,80	1,00
1112053	ONHX 0606 ANEN-W*			◈							◈				◈								16,50	6,35	6,20	-	6,00
1112284	ONKX 0606 ANEN-LP			◈	◈	◈			◈	◈		◈			◈	◈	◈						16,50	6,35	6,20	0,80	1,00
NEW 1112287	ONKX 0606 ANEN-MP	◈		◈		◈																	16,50	6,35	6,20	0,80	1,00
1112291	ONKX 0606 ANEN-MK										◈		◈										16,50	6,35	6,20	0,80	1,00
1111951	SNHX 1606 ANER-LP			◈	◈	◈			◈	◈					◈	◈	◈						16,50	6,35	12,50	0,80	2,20
NEW 1111952	SNHX 1606 ANER-MP	◈		◈		◈																	16,50	6,35	12,50	0,80	2,20
1111953	SNHX 1606 ANER-MK												◈										16,50	6,35	12,50	0,80	2,20
NEW 1112281	SNKX 1606 ANER-MP	◈		◈		◈																	16,50	6,35	12,50	0,80	2,20
1112282	SNKX 1606 ANER-MK											◈	◈										16,50	6,35	12,50	0,80	2,20

◈ First choice | Primeira opção | 1ª opción ◈ Stock item | Produto de stock | Itens de stock ○ Available under request (see page A-7) | Disponível sobre consulta (consulte a página A-7) | Disponible bajo consulta (mire pagina A-7)

Insert order code = (1) Geometry Code + (2) Grade Code

* Wiper insert with 4 rights and 4 left-hand cutting edges.

page A-236 page A -244

PLUS 91245

GRADES SELECTION GUIDE | Guia para selecção de graus | Tabla para selección de calidades

ISO	PSM	Material	HB (Brinell)	Grades ← Wear Resistance — Toughness → PH5705	PH7920	PH7930	PH5740	PHS740	PH7740
P	1	Unalloyed Steel	125-220		✓	✓		✓	✓
	2	Low-Alloyed Steel	220-280		✓	✓		✓	✓
	3	High-Alloyed Steel	280-380		✓	✓		✓	✓
M	4	SS - Ferritic / Martensitic	200-330			✓			✓
	5	SS - Austenitic	200-330			✓			✓
	6	SS - Austenitic-ferritic (Duplex)	230-260			✓			✓
K	7	Malleable Cast Iron	130-230	✓	✓		✓		
	8	Grey Cast Iron	180-245	✓	✓		✓		
	9	Nodular Cast iron	160-250	✓	✓		✓		
S	11	Heat Resistant Super Alloys	200-320			✓			✓

Good Conditions
Average Conditions
Difficult Conditions

RECOMMENDED CUTTING CONDITIONS | Condições de corte recomendadas | Condiciones de corte recomendables

ISO	PSM	Material	HB (Brinell)	Vc (m/min) ← Wear Resistance — Toughness → PH5705	PH7920	PH7930
P	1	Unalloyed Steel	125-220	-	180 **(260)** 320	-
	2	Low-Alloyed Steel	220-280	-	150 **(200)** 240	-
	3	High-Alloyed Steel	280-380	-	140 **(180)** 200	-
M	4	SS - Ferritic / Martensitic	200-330	-	-	120 **(180)** 200
	5	SS - Austenitic	200-330	-	-	100 **(140)** 180
	6	SS - Austenitic-ferritic (Duplex)	230-260	-	-	90 **(110)** 140
K	7	Malleable Cast Iron	130-230	170 **(190)** 305	-	-
	8	Grey Cast Iron	180-245	180 **(280)** 350	-	-
	9	Nodular Cast iron	160-250	130 **(160)** 210	-	-
S	11	Heat Resistant Super Alloys	200-320	-	-	35 **(50)** 75

ISO	PSM	Material	HB (Brinell)	Vc (m/min) ← Wear Resistance — Toughness → PH5740	PHS740	PH7740	Feed fz (mm/t) SNH(K)X/ONH(K)X
P	1	Unalloyed Steel	125-220	-	160 **(200)** 240	160 **(200)** 240	0,15 **(0,25)** 0,4
	2	Low-Alloyed Steel	220-280	-	140 **(160)** 200	140 **(160)** 200	0,15 **(0,25)** 0,4
	3	High-Alloyed Steel	280-380	-	120 **(140)** 170	120 **(140)** 170	0,15 **(0,25)** 0,4
M	4	SS - Ferritic / Martensitic	200-330	-	-	110 **(140)** 160	0,1 **(0,20)** 0,3
	5	SS - Austenitic	200-330	-	-	90 **(120)** 140	0,1 **(0,20)** 0,3
	6	SS - Austenitic-ferritic (Duplex)	230-260	-	-	80 **(100)** 120	0,1 **(0,20)** 0,3
K	7	Malleable Cast Iron	130-230	150 **(170)** 260	-	-	0,15 **(0,25)** 0,4
	8	Grey Cast Iron	180-245	155 **(190)** 290	-	-	0,14 **(0,25)** 0,4
	9	Nodular Cast iron	160-250	115 **(140)** 180	-	-	0,14 **(0,25)** 0,4
S	11	Heat Resistant Super Alloys	200-320	-	-	20 **(40)** 55	0,1 **(0,15)** 0,17

(Note 1) Cutting conditions a_e/Dc=70%.
(Note 2) It's possible to occur vibrations in certain cases. Please reduce depth of cut and / or reduce cutting conditions in following cases:
- When using long shank;
- When using long tool overhang with arbor type;
- When application has poor clamping rigidity or when using a low rigidity machine.

(Note 3) PH5... and PHS... can be used wet or dry. PH7... use only air.

Selection Example:

ISO	PSM	Material	HB (Brinell)	Vc (m/min) ← Wear Resistance — Toughness → PH5705	PH5740	Feed f_Z (mm/t) SNHX/ONHX
K	7	Malleable cast iron	130-230	170 **(190)** 305	150 **(170)** 260	0,15 **(0,25)** 0,40
	8	Grey cast iron	180-245	180 **(280)** 350	155 **(190)** 290	0,14 **(0,25)** 0,40
	9	Nodular cast iron	160-250	130 **(160)** 210	115 **(140)** 180	0,14 **(0,25)** 0,40

This example shows the recommended starting cutting conditions, indicated in **Bold type**.

CHIP-BREAKER SELECTION GUIDE | Guia para aplicações do quebra-aparas | Guía para aplicación del rompevirutas

ISO	PSM	Material	HB (Brinell)	Chip-Breaker Application	
				1st choice	Alternative
P	1	Unalloyed Steel	125-220	LP	MP
	2	Low-Alloyed Steel	220-280	LP	MP
	3	High-Alloyed Steel	280-380	MP	-
M	4	SS - Ferritic / Martensitic	200-330	LP	-
	5	SS - Austenitic	200-330	LP	-
	6	SS - Austenitic-ferritic (Duplex)	230-260	LP	-
K	7	Malleable Cast Iron	130-230	MK	-
	8	Grey Cast Iron	180-245	MK	-
	9	Nodular Cast iron	160-250	MK	LP
S	11	Heat Resistant Super Alloys	200-320	LP	-

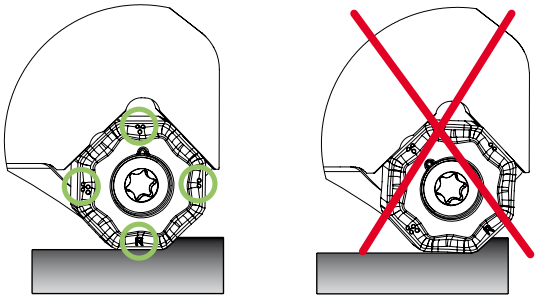

The points and letter (R or L) on the insert indicates the side that should be parallel to the workspace material.

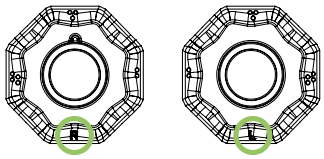

Wiper insert with 4 Right and 4 Left-hand cutting edges. The side work of the insert it's indicated by the letter R (Right) & L (Left).

WIPER INSERTS

Rec. Cutting Conditions:
- F_W at least 40% larger than f_n (f_n-f_2xZ);
- Axial depth of cut is 0,5 - 0,8mm.

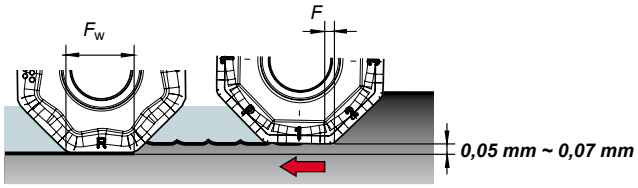

Example:
- The width of the parallel land (F) of the insert is 1mm.
- Width a cutter of 10 inserts and using a feed per tooth (f_z) of 0,3mm, the feed per revolution (f_n) will be 3mm, i.e. 66% bigger than the parallel land.
- To obtain a good surface finishing, the feed per revolution should be a maximum of 80% of 1mm = 0,8mm.
- The wiper insert will have a parallel land (F_W) with a width of approximately 6,0mm.
- Result: Feed per revolution (f_n) could be increased from 0,8mm to 60% of 6,0mm = 3,6mm.

Note: Other limitations, such as machine power, must be taken into consideration.

How to use a wiper insert:
- Since wiper is one corner use to standard cutters, please attach the insert with the parallel land down to the workspace cutting surface.
- The points and the letter (R or L) on the insert indicates the side that should be parallel to the worspace material.
- The side work of the insert it's indicated by the letter (R - Right & L - Left).

LINEPRO 06045



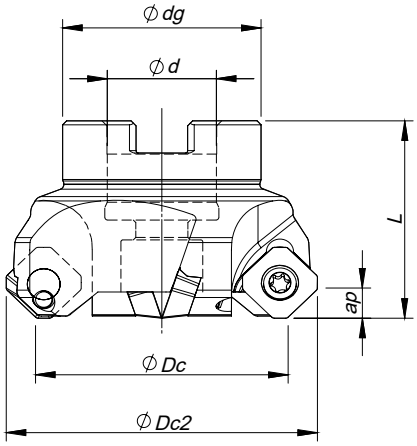

Arbor Mounting

K_r=45° | γ_p=+19°

Order code Código	Reference Referência Referencia		Dimensions | Dimensões | Dimensiones (mm)					Kg	Specifications		Insert Pastilha Inserto	Stock
			ØDc	ØDc2	Ød	Ødg	L		Arbor Type	Ap max (mm)		
181003500	050A06045-04-19-U022040	4	50	62	22	42	40	0,350	A	6,0	SE...T/W 1204	○
181148800	063A06045-05-19-022050	5	63	75	22	42	50	0,800	A	6,0	SE...T/W 1204	○
181148900	080A06045-06-19-027050	6	80	92	27	50	50	1,150	A	6,0	SE...T/W 1204	○
181149000	100A06045-06-19-032050	6	100	112	32	64	50	1,700	A	6,0	SE...T/W 1204	○
181040200	125A06045-07-19-U040063	7	125	132	40	85	63	2,750	B	6,0	SE...T/W 1204	○
181040300	160A06045-08-19-U040063	8	160	172	40	100	63	4,600	C	6,0	SE...T/W 1204	○

Stock item | Produto de stock | Itens de stock

○ Available under request (see page A-6) | Disponível sobre consulta (consulte a página A-6) | Disponible bajo consulta (mire pagina A-6)

SEH... 1204 | Inserts | Pastilhas | Plaquitas

SEHW



SEHT



SEHT-LN

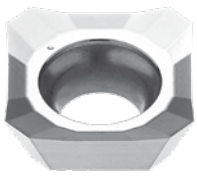

SEHW | SEHT | SEHT-LN

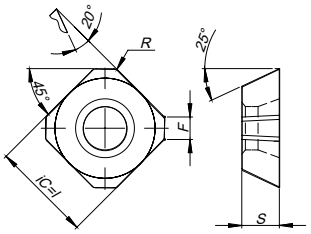

		P						M				K					N		S		H	Dimensions Dimensões Dimensiones (mm)					
		CVD	PVD					CVD	PVD			CVD	PVD				UNC	PCD	PVD		PVD						
	(2) Grade code	T9	P7	54	68	66	I5	R1	68	66	I5	L5	54	68	66	I5	10	D6	P3	I5	P7						
(1) Geometry code	ISO Reference	PHS740	PH7603	PH6910	PH6920	PH6930	PH6740	PHM740	PH6920	PH6930	PH6740	PH5705	PH6910	PH6920	PH6930	PH6740	PH0910	PDP410	PH6930	PH6740	PH7603	iC	S	I	F	B	R
1110216	SEHT 1204 AFEN				◉		◉				◉			◉		◉						12,70	4,76	12,70	2,80	-	-
1110218	SEHT 1204 AFTN				◉		◉				◉			◉		◉						12,70	4,76	12,70	2,80	-	-
1112283	SEHT 1204 AFFN-LN																◉					12,70	4,76	12,70	2,00		-
1110219	SEHW 1204 AFEN				◉		◉				◉			◉		◉						12,70	4,76	12,70	2,80	-	-
1110222	SEHW 1204 AFTN				◉		◉				◉			◉		◉						12,70	4,76	12,70	2,80	-	-

◉ First choice | Primeira opção | 1ª opción ◉ Stock item | Produto de stock | Itens de stock ○ Available under request (see page A-7) | Disponível sobre consulta (consulte a página A-7) | Disponible bajo consulta (mire pagina A-7)

Insert order code = (1) Geometry Code + (2) Grade Code

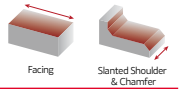

SPARE PARTS | Complementos | Repuestos

Order separately

Cutter ØDc	Insert Screw	Key (Torx)	Key (Torx - Nm)	Torque Value
A06045 – 50 - 160	P0501100	PT20	DT2050	5,0

Note: The toolholder is supplied with the XT/PT key. To order the DT key please check the page A-243.
Check the procedures for the clamping screws on the page A-243.

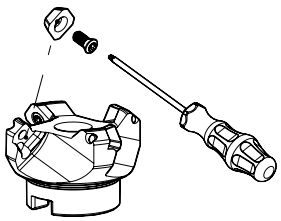

GRADES SELECTION GUIDE | Guia para selecção de graus | Tabla para selección de calidades

ISO	PSM	Material	HB (Brinell)	Grades ← Wear Resistance		Toughness →
				PH0910	PH6920	PH6740
P	1	Unalloyed steel	125-220		✓	✓
	2	Low-alloyed steel	220-280		✓	✓
	3	High-alloy steel	280-380		✓	✓
M	4	SS - Ferritic / Martensitic	200-330			✓
	5	SS - Austenitic	200-330			✓
	6	SS - Austenitic-ferritic (Duplex)	230-260			✓
K	7	Malleable cast iron	130-230		✓	✓
	8	Grey cast iron	180-245		✓	✓
	9	Nodular cast iron	160-250		✓	✓
N	10	Aluminium and Non Ferrous	30-130	✓		

Good Conditions
Average Conditions
Difficult Conditions

RECOMMENDED CUTTING CONDITIONS | Condições de corte recomendadas | Condiciones de corte recomendables

ISO	PSM	Material	HB (Brinell)	Vc (m/min) ← Wear Resistance		Toughness →	Feed fz (mm/t)		
				PH0910	PH6920	PH6740	SEHT 1204...	SEHT 1204 LN	SEHW 1204...
P	1	Unalloyed Steel	125-220	-	150-230	130-160	0,10-0,20	-	0,10-0,20
	2	Low-Alloyed Steel	220-280	-	140-220	120-150	0,10-0,20	-	0,10-0,20
	3	High-Alloyed Steel	280-380	-	130-180	100-130	0,10-0,20	-	0,10-0,20
M	4	SS - Ferritic / Martensitic	200-330	-	-	100-120	0,10-0,15	-	0,10-0,20
	5	SS - Austenitic	200-330	-	-	80-110	0,10-0,15	-	0,10-0,20
	6	SS - Austenitic-ferritic (Duplex)	230-260	-	-	70-100	0,10-0,15	-	0,10-0,20
K	7	Malleable Cast Iron	130-230	-	150-280	130-250	0,10-0,25	-	0,10-0,25
	8	Grey Cast Iron	180-245	-	130-230	110-220	0,10-0,25	-	0,10-0,25
	9	Nodular Cast iron	160-250	-	80-190	80-170	0,10-0,25	-	0,10-0,25
N	10	Aluminium and Non Ferrous	30-130	350-1400	-	-	-	0,10-0,25	-

(Note 1) Cutting conditions ae/DC=70%
(Note 2) Cutting conditions should be ajusted according to the machine and work rigidity.
(Note 3) If chattering occurs, reduce ap and Vc by 30% and keep the same fz per tooth.

CHIP-BREAKER SELECTION GUIDE | Guia para aplicações do quebra-aparas | Guía para aplicación del rompevirutas

ISO	PSM	Material	HB (Brinell)	Chip-Breaker Application	
				1st choise	Dificult Operations
P	1	Unalloyed Steel	125-220	SEHT 12... AFEN	SEHW 12... AFEN
	2	Low-Alloyed Steel	220-280	SEHT 12... AFTN	SEHW 12... AFTN
	3	High-Alloyed Steel	280-380	SEHT 12... AFTN	SEHW 12... AFTN
M	4	SS - Ferritic / Martensitic	200-330	SEHT 12... AFEN	SEHW 12... AFEN
	5	SS - Austenitic	200-330	SEHT 12... AFEN	SEHW 12... AFEN
	6	SS - Austenitic-ferritic (Duplex)	230-260	SEHW 12... AFEN	-
K	7	Malleable Cast Iron	130-230	SEHT 12... AFEN	SEHW 12... AFEN
	8	Grey Cast Iron	180-245	SEHT 12... AFEN	SEHW 12... AFEN
	9	Nodular Cast iron	160-250	SEHW 12... AFEN	SEHW 12... AFTN
N	10	Aluminium and Non Ferrous	30-130	SEHT 12... AFFN-LN	-

page A-236
page A -244

LINEPRO 09945



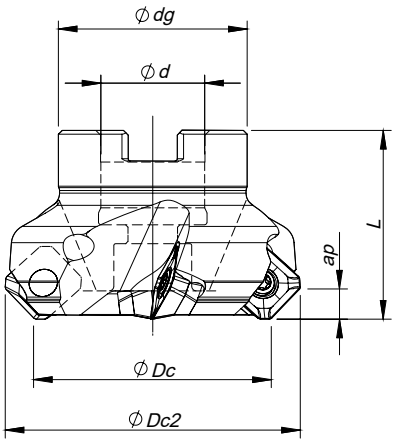

Arbor Mounting

K_r=45° | γ_p=+20° ~+21°

Order code Código	Reference Referência Referencia		Dimensions | Dimensões | Dimensiones (mm)					Kg	Specifications		Insert Pastilha Inserto	Stock
			ØDc	ØDc2	Ød	Ødg	L		Arbor Type	Ap max (mm)		
181034700	050A09945-04-20-U022040	4	50	63	22	40	40	0,36	A	6,0	SE...13T3	◉
181024200	063A09945-05-21-U022040	5	63	76	22	48	40	0,59	A	6,0	SE...13T3	◉
181024300	080A09945-06-21-U027050	6	80	93	27	60	50	1,02	B	6,0	SE...13T3	◉
181024400	100A09945-07-21-U032050	7	100	113	32	70	50	1,52	B	6,0	SE...13T3	◉
181024500	125A09945-08-21-U040063	8	125	138	40	90	63	3,16	B	6,0	SE...13T3	◉
181024600	160A09945-10-21-U040063	10	160	173	40	110	63	4,61	C	6,0	SE...13T3	◉
181051400	250A09945-24-21-U060063L	24	250	263	60	172	63	13,89	C	6,0	SE...13T3	○
181024800	250A09945-24-21-U060063	24	250	263	60	172	63	13,89	C	6,0	SE...13T3	○

◉ Stock item | Produto de stock | Itens de stock

○ Available under request (see page A-6) | Disponível sobre consulta (consulte a página A-6) | Disponible bajo consulta (mire pagina A-6)

SPARE PARTS | Complementos | Repuestos

Cutter ØDc	Insert Screw	Key (Torx)	Order separately Key (Torx - Nm)	Torque Value	Order separately Shim	Shim Screw
A09945 – 50 - 80	P0351200	XT15	DT1530	3,0	CS130300	T0503509
A09945 – 100-250	P0351200	PT15	DT1530	3,0	CS130300	T0503509

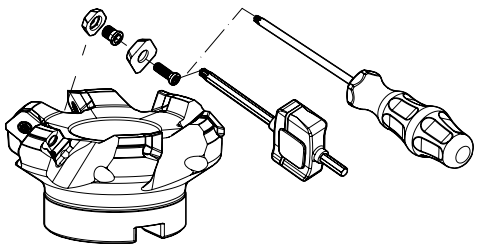

Note: The toolholder is supplied with the XT/PT key. To order the DT key please check the page A-243.
Check the procedures for the clamping screws on the page A-243.

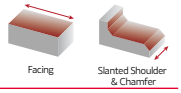

SE... 13T3 | Inserts | Pastilhas | Plaquitas

SEHT



SEHW



SEHT-LN

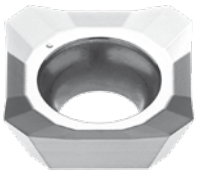

SEHT | SEHW | SEHT-LN

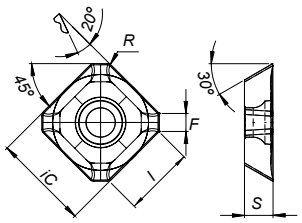

SEHT-W

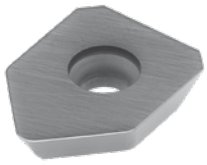

SEHT-W

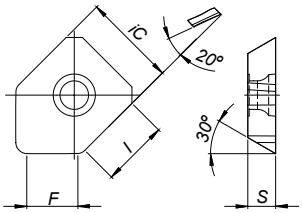

		P						M			K						N		S		H	Dimensions Dimensões Dimensiones (mm)					
		CVD	PVD					CVD	PVD		CVD		PVD				UNC	PCD	PVD		PVD					
	(2) Grade code	T9	P7	54	68	66	I5	R1	66	I5	L5	L9	54	68	66	I5	10	D6	66	I5	P7					
(1) Geometry code	ISO Reference	PHS740	PH7603	PH6910	PH6920	PH6930	PH6740	PHM740	PH6930	PH6740	PH5705	PH5740	PH6910	PH6920	PH6930	PH6740	PH0910	PDP410	PH6930	PH6740	PH7603	iC	S	l	F	B	R
1110559	SEHT 13T3 AGSN				◉		◉			◉				◉		◉						13,35	3,97	10,0	2,0	-	-
1110931	SEHT 13T3 AGTN				○		○			○				○		○						13,35	3,97	10,0	2,0	-	-
1111586	SEHT 13T3 AGFN-LN																◉					13,35	3,97	10,0	2,3	-	-
1110627	SEHT 13T3 AGSN-W				◉									◉								13,35	3,97	10,0	8,2	-	-
1111146	SEHW 13T3 AGFN				◉									◉								13,35	3,97	10,0	2,0	-	-

◉ First choice | Primeira opção | 1ª opción ◉ Stock item | Produto de stock | Itens de stock ○ Available under request (see page A-7) | Disponível sobre consulta (consulte a página A-7) | Disponible bajo consulta (mire pagina A-7)

Insert order code = (1) Geometry Code + (2) Grade Code

GRADES SELECTION GUIDE | Guia para selecção de graus | Tabla para selección de calidades

ISO	Material	HB (Brinell)	Grades ← Wear Resistance — Toughness → PH0910	PH6920	PH6740
P	Unalloyed steel	125-220		✓	✓
	Low-alloyed steel	220-280		✓	✓
	High-alloy steel	280-380		✓	✓
M	SS - Ferritic / Martensitic	200-330			✓
	SS - Austenitic	200-330			✓
	SS - Austenitic-ferritic (Duplex)	230-260			✓
K	Malleable cast iron	130-230		✓	✓
	Grey cast iron	180-245		✓	✓
	Nodular cast iron	160-250		✓	✓
N	Aluminium and Non Ferrous	30-130	✓		

◉ Good Conditions
◉ Average Conditions
◉ Difficult Conditions

page A-236
page A -244

LINEPRO 09945

RECOMMENDED CUTTING CONDITIONS | Condições de corte recomendadas | Condiciones de corte recomendables

ISO	PSM	Material	HB (Brinell)	Vc (m/min) ← Wear Resistance Toughness →			Feed fz (mm/t)			
				PH0910	PH6920	PH6740	SEHT 13T3 AGSN	SEHW 13T3 AGFN	SEHT 13T3 AGFN-LN	SEHT 13T3 AGSN-W
P	1	Unalloyed Steel	125-220	-	150-230	130-160	0,10-0,25	-	-	0,10-0,30
	2	Low-Alloyed Steel	220-280	-	140-220	120-150	0,10-0,20	-	-	0,10-0,30
	3	High-Alloyed Steel	280-380	-	130-180	100-130	0,10-0,20	-	-	0,10-0,30
M	4	SS - Ferritic / Martensitic	200-330	-	-	100-120	0,10-0,20	-	-	-
	5	SS - Austenitic	200-330	-	-	80-110	0,10-0,20	-	-	-
	6	SS - Austenitic-ferritic (Duplex)	230-260	-	-	70-100	0,10-0,20	-	-	-
K	7	Malleable Cast Iron	130-230	-	150-280	130-250	0,10-0,25	0,10-0,25	-	0,10-0,30
	8	Grey Cast Iron	180-245		130-230	110-220	0,10-0,25	0,10-0,25	-	0,10-0,30
	9	Nodular Cast iron	160-250		80-190	80-170	0,10-0,20	0,10-0,20	-	0,10-0,30
N	10	Aluminium and Non Ferrous	30-130	350-1400	-	-	-	-	0,10-0,20	-

(Note 1) Cutting conditions ae/DC=70%
(Note 2) Cutting conditions should be ajusted according to the machine and work rigidity.
(Note 3) If chattering occurs, reduce ap and Vc by 30% and keep the same fz per tooth.

CHIP-BREAKER SELECTION GUIDE | Guia para aplicações do quebra-aparas | Guía para aplicación del rompevirutas

ISO	PSM	Material	HB (Brinell)	Chip-Breaker Application	
				1st choise	Dificult Operations
P	1	Unalloyed Steel	125-220	SEHT... AGSN	-
	2	Low-Alloyed Steel	220-280	SEHT... AGSN	-
	3	High-Alloyed Steel	280-380	SEHT... AGSN	-
M	4	SS - Ferritic / Martensitic	200-330	SEHT... AGSN	SEHW... AGFN
	5	SS - Austenitic	200-330	SEHT... AGSN	SEHW... AGFN
	6	SS - Austenitic-ferritic (Duplex)	230-260	SEHT... AGSN	SEHW... AGFN
K	7	Malleable Cast Iron	130-230	SEHW... AGFN	-
	8	Grey Cast Iron	180-245	SEHW... AGFN	-
	9	Nodular Cast iron	160-250	SEHW... AGFN	-
N	10	Aluminium and Non Ferrous	30-130	SEHT... AGFN-LN	-

WIPER INSERTS

Rec. Cutting Conditions
- F_W at least 40% larger than fn (f_n=f_z x Z);
- Axial depth of cut is 0,5 - 0,8 mm;

Example:
- The width of parallel land (F) of the SEHT insert is 2,0 mm.
- With a cutter of 10 inserts and using a feed per tooth (f_z) of 0,3 mm, the feed per revolution (f_n) will be 3 mm, i.e. 66% bigger than the parallel land.
- To obtain a good surface finishing, the feed per revolution should be a maximum 80% of 2,0 mm = 1,6 mm.
- The wiper insert will have a parallel land (F_W) with a width of approximately 8,2 mm.
- Result: Feed per revolution (f_n) could be increased from 1,6 mm to 60% of 6,0 mm = 4,9 mm.

Note: Other limitations, such as machine power, must be taken into consideration.

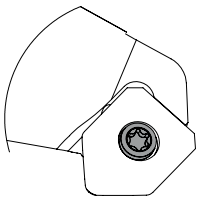

Fig. A

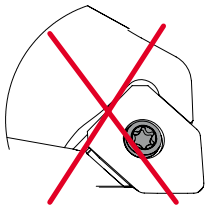

Fig. B

When using wiper insert, install the insert as shown on Fig. A.
If the insert is installed as shown on Fig. B breakage of the insert is inevitable and normal surface finish can not been obtained.

page A-236
page A -244

LINEPRO 00036



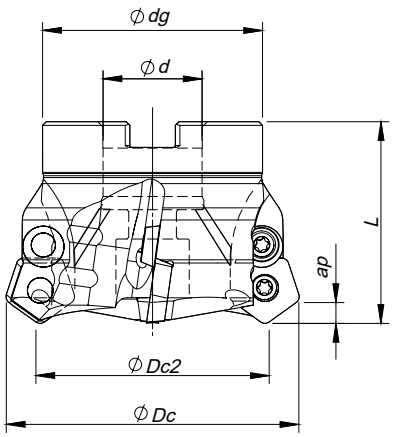

Arbor Mounting

K_r=36° | γ_p=+9° | R_p=7,0

Order code Código	Reference Referência Referencia		Dimensions | Dimensões | Dimensiones (mm)					Kg	Specifications		Insert Pastilha Inserto	Stock
			ØDc	ØDc2	Ød	Ødg	L		Arbor Type	Ap max (mm)		
181009800	066C00036-05-09-027055	5	66	47,5	27	48	55	0,520	A	5,5	PD...1204	◈
181010400	080C00036-06-09-027055	6	80	61,5	27	60	55	0,940	A	5,5	PD...1204	◈
181018100	100C00036-07-09-U032055	7	100	81,5	32	70	55	1,400	B	5,5	PD...1204	◈
181001100	125C00036-08-09-U040055	8	125	106,5	40	90	55	2,420	B	5,5	PD...1204	◈
181002700	160C00036-09-09-U040055	9	160	141,5	40	120	55	4,590	B	5,5	PD...1204	◈

◈ Stock item | Produto de stock | Itens de stock

◯ Available under request (see page A-6) | Disponível sobre consulta (consulte a página A-6) | Disponible bajo consulta (mire pagina A-6)

PD... 1204... | Inserts | Pastilhas | Plaquitas

PDMW

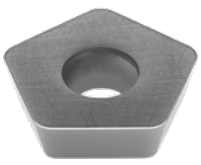

PDHW

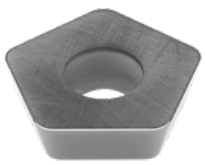

PDM(H)W

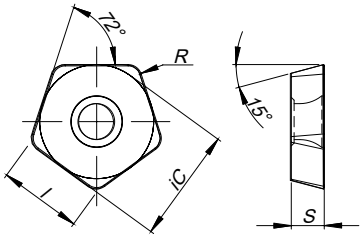

		P						M				K						N		S		H	Dimensions Dimensões Dimensiones (mm)					
		CVD	PVD					CVD	PVD			CVD			PVD			UNC	PCD	PVD		PVD						
	(2) Grade code	T9	P7	G1	68	78	86	R1	G4	P3	G6	L5	L6	L9	G1	68	P3	10	D6	P3	G6	P7						
(1) Geometry code	ISO Reference	PHS740	PH7603	PH7910	PH6920	PH6125	PH6135	PHM740	PH7920	PH7930	PH7740	PH5705	PH5320	PH5740	PH7910	PH6920	PH7930	PH0910	PDP410	PH7930	PH7740	PH7603	iC	S	l	F	B	R
1110555	PDMW 120420 T					◈	◈																16,52	4,76	12,0	-	-	2,0
1110554	PDHW 120420 T				◈	◈	◈									◈							16,52	4,76	12,0	-	-	2,0

◈ First choice | Primeira opção | 1ª opción

◈ Stock item | Produto de stock | Itens de stock

◯ Available under request (see page A-7) | Disponível sobre consulta (consulte a página A-7) | Disponible bajo consulta (mire pagina A-7)

Insert order code = (1) Geometry Code + (2) Grade Code

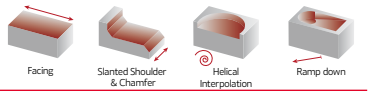

SPARE PARTS | Complementos | Repuestos

ScrewCutter ØDc	Insert Screw	Key (Torx)	Key (Torx - Nm) (Order separately)	Torque Value	Washer (Order separately)	Washer Screw
C00036 – 66-80	P0451001	XT20	DT2050	5,0	HC01200	P0451001
C00036 – 100-160	P0451001	PT20	DT2050	5,0	HC01200	P0451001

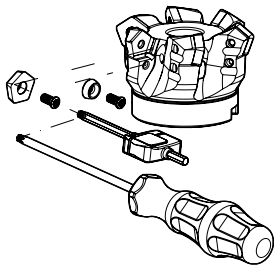

Note: The toolholder is supplied with the XT/PT key. To order the DT key please check the page A-243.
Check the procedures for the clamping screws on the page A-243.

RECOMMENDED CUTTING CONDITIONS | Condições de corte recomendadas | Condiciones de corte recomendables

ISO	PSM	Material	HB (Brinell)	Vc (m/min) ← Wear Resistance		Toughness →	Feed fz (mm/t)
				PH6920	PH6125	PH6135	PDHW / PDMW
P	1	Unalloyed Steel	125-220	150-230	160-190	150-180	0,25-0,50
	2	Low-Alloyed Steel	220-280	140-220	140-180	140-170	0,25-0,50
	3	High-Alloyed Steel	280-380	130-180	130-160	120-150	0,25-0,40
K	7	Malleable Cast Iron	130-230	150-280	-	-	0,25-0,60
	8	Grey Cast Iron	180-245	130-230	-	-	0,25-0,60
	9	Nodular Cast iron	160-250	80-190	-	-	0,25-0,60

(Note 1) Cutting conditions ae/DC=70%
(Note 2) Cutting conditions should be ajusted according to the machine and work rigidity.
(Note 3) If chattering occurs, reduce ap and Vc by 30% and keep the same fz per tooth.

RAMPING AND HELICAL INTERPOLATION

Descida em rampa e interpolação helicoidal | Bajada en rampa e interpolación circular

Ramping

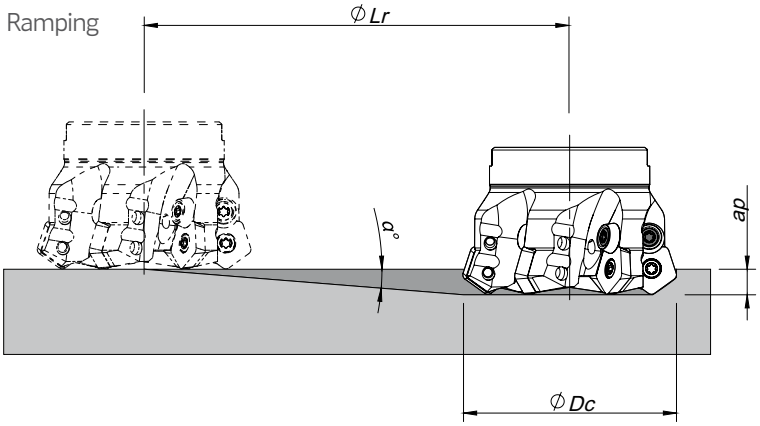

Helical Interpolation

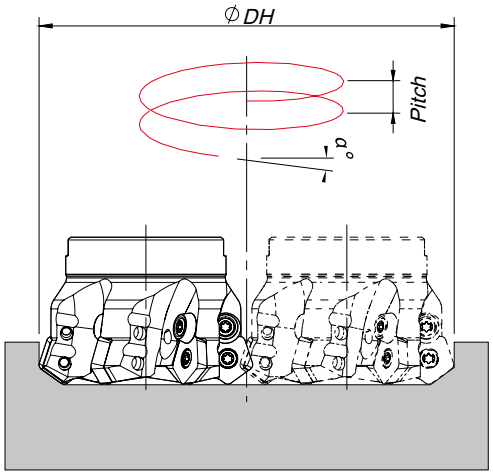

Blind hole
Flat bottom

Ødi = ØDH - ØDc

ØDc	Ramping			Helical Interpolation		
	Max Ramp a°	Max a_p	Min Lr	ØDHmin	ØDHmax	Max Pitch/Rev.
66	8	5,5	39,1	113,3 -	- 130,4	20,9 28,4
80	6	5,5	52,3	141,3 -	- 158,4	20,2 25,9
100	4,3	5,5	73,1	181,3 -	- 198,4	19,2 23,2
125	3,2	5,5	98,4	231,3 -	- 248,4	18,7 21,7
160	2,4	5,5	131,2	301,3 -	- 318,4	18,6 20,8

Note: During helical interpolation do not exceed max Pitch.

page A-236
page A -244

PENTA HIFEED 06320



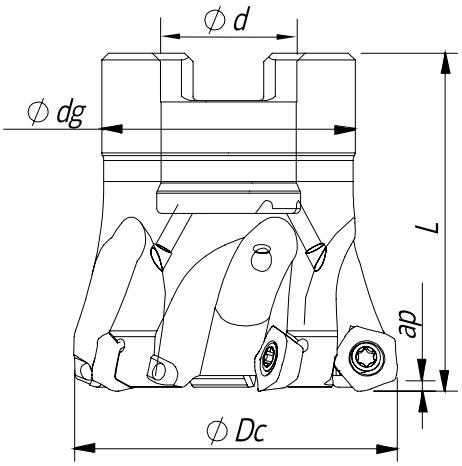

Arbor Mounting

K_r=20° | γ_p=14° | Rp=2,5

Order code Código	Reference Referência Referencia		Dimensions | Dimensões | Dimensiones (mm)				Kg	Specifications		Insert	Stock
			ØDc	Ød/M	Ødg	L		Ap max (mm)	Arbor Type		
181129300	040A06320-05-14-016040	5	40	16	30	40	0,15	1,0	A	POKT 0403...	◈
181129400	050A06320-06-14-022045	6	50	22	40	45	0,19	1,0	A	POKT 0403...	◈
181129500	052A06320-06-14-022045	6	52	22	40	45	0,29	1,0	A	POKT 0403...	◈
181129600	063A06320-07-14-027050	7	63	27	48	50	0,50	1,0	A	POKT 0403...	○
181131300	066A06320-07-14-027050	7	66	27	48	50	0,55	1,0	A	POKT 0403...	○

◈ Stock item | Produto de stock | Itens de stock ○ Available under request (see page A-6) | Disponível sobre consulta (consulte a página A-6) | Disponible bajo consulta (mire pagina A-6)



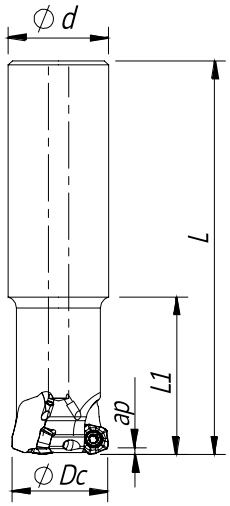

Cylindrical Shank

K_r=20° | γ_p=14° | Rp=2,5

Order code Código	Reference Referência Referencia		Dimensions | Dimensões | Dimensiones (mm)				Kg	Specifications	Insert	Stock
			ØDc	Ød/M	L	L1		Ap max (mm)		
181147200	020E06320-02-14-020130	2	20	20	130	40	0,38	1,0	POKT 0403...	◈
181131000	025E06320-03-14-025150	3	25	25	150	40	0,41	1,0	POKT 0403...	◈
181131100	032E06320-05-14-032180	5	32	32	180	50	0,56	1,0	POKT 0403...	◈
181131200	040E06320-05-14-032180	5	40	32	180	50	0,70	1,0	POKT 0403...	○

◈ Stock item | Produto de stock | Itens de stock ○ Available under request (see page A-6) | Disponível sobre consulta (consulte a página A-6) | Disponible bajo consulta (mire pagina A-6)

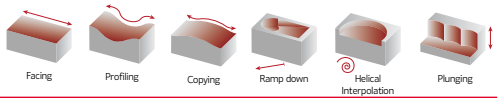



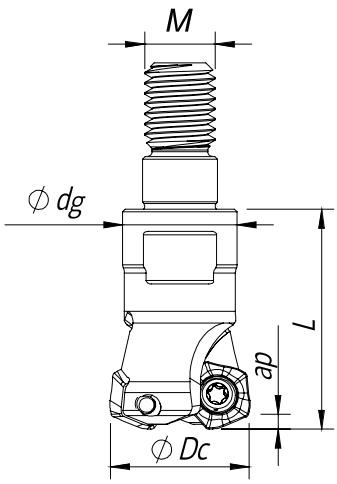

Threaded Coupling

K_r=20° | γ_p=14° | Rp=2,5

Order code Código	Reference Referência Referencia		Dimensions | Dimensões | Dimensiones (mm)				Kg	Specifications	Insert	Stock
			ØDc	Ød/M	Ødg	L		Ap max (mm)		
181113500	016R06320-02-14-M08025	2	16	M08	13	25	0,02	1,0	POKT 0403...	◈
181113600	020R06320-02-14-M10025	2	20	M10	18	25	0,05	1,0	POKT 0403...	◈
181113700	025R06320-03-14-M12028	3	25	M12	21	28	0,07	1,0	POKT 0403...	◈
181129100	032R06320-05-14-M16035	5	32	M16	29	35	0,17	1,0	POKT 0403...	◈
181129200	035R06320-05-14-M16035	5	35	M16	29	35	0,19	1,0	POKT 0403...	◈
181130900	042R06320-05-14-M16035	5	42	M16	29	35	0,23	1,0	POKT 0403...	◈

◈ Stock item | Produto de stock | Itens de stock ◯ Available under request (see page A-6) | Disponível sobre consulta (consulte a página A-6) | Disponible bajo consulta (mire pagina A-6)

POKT 0403... | Inserts | Pastilhas | Plaquitas

POKT-MP



POKT-MP

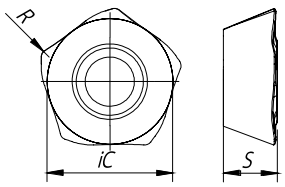

		P						M				K						N		S		H	Dimensions Dimensões Dimensiones (mm)				
		CVD	PVD					CVD	PVD			CVD		PVD				UNC	PCD	PVD		PVD					
	(2) Grade code	T9	P7	G1	G4	P3	G6	R1	G4	P3	G6	L5	L6	G1	G4	P3	G6	10	D6	P3	G6	M6					
(1) Geometry code	ISO Reference	PHS740	PH7603	PH7910	PH7920	PH7930	PH7740	PHM740	PH7920	PH7930	PH7740	PH5705	PH5320	PH7910	PH7920	PH7930	PH7740	PH0910	PDP410	PH7930	PH7740	PH6103	iC	S	I	R	F
1112365	POKT 040305 ZDSR-MP			◈	◈	◈	◈							◈	◈								7,00	3,00	-	0,50	-

◈ First choice | Primeira opção | 1ª opción ◈ Stock item | Produto de stock | Itens de stock ◯ Available under request (see page A-7) | Disponível sobre consulta (consulte a página A-7) | Disponible bajo consulta (mire pagina A-7)

Insert order code = (1) Geometry Code + (2) Grade Code

page A-236 page A -244

PENTA HIFEED 06320

SPARE PARTS Complementos | Repuestos

Cutter ØDc	Insert Screw	Key (Torx)	Key (Torx - Nm) (Order separately)	Torque Value	Screw (Order separately)	DIN 6368 Wrench
R06320 - 16-42	P0250503	XT08	DT0812	1,20	-	-
E06320 - 25-40	P0250503	XT08	DT0812	1,20	-	-
A06320 - 40-60	P0250503	XT08	DT0812	1,20	-	-

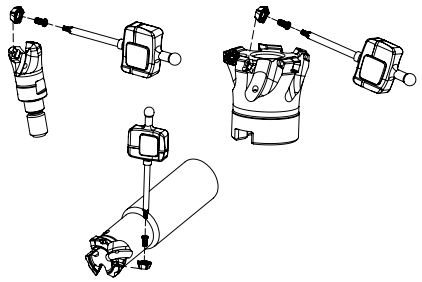

Note: The toolholder is supplied with the XT/PT key. To order the DT key please check the page A-243.
Check the procedures for the clamping screws on the page A-243.

GRADES SELECTION GUIDE | Guia para selecção de graus | Tabla para selección de calidades

ISO	PSM	Material	HB (Brinell)	Grades ← Wear Resistance			Toughness →
				PH7910	PH7920	PH7930	PH7740
P	1	Unalloyed Steel	125-220	✓	✓		
	2	Low-Alloyed Steel	220-280	✓	✓		
	3	High-Alloyed Steel	280-380	✓	✓		
M	4	SS - Ferritic / Martensitic	200-330			✓	✓
	5	SS - Austenitic	200-330			✓	✓
	6	SS - Austenitic-ferritic (Duplex)	230-260			✓	✓
K	7	Malleable Cast Iron	130-230	✓	✓		
	8	Grey Cast Iron	180-245	✓	✓		
	9	Nodular Cast iron	160-250	✓	✓		
S	11	Heat Resistant Super Alloys	200-320			✓	✓

Good Conditions
Average Conditions
Difficult Conditions

RECOMMENDED CUTTING CONDITIONS | Condições de corte recomendadas | Condiciones de corte recomendables

ISO	PSM	Material	HB (Brinell)	Vc (m/min) ← Wear Resistance			Toughness →	Feed fz (mm/t)
				PH7910	PH7920	PH7930	PH7740	POKT 04...-MP
P	1	Unalloyed Steel	125-220	190-280	180-250	-	-	0,50-1,50
	2	Low-Alloyed Steel	220-280	180-240	170-210	-	-	0,50-1,50
	3	High-Alloyed Steel	280-380	170-220	160-200	-	-	0,50-1,50
M	4	SS - Ferritic / Martensitic	200-330	-	-	130-170	120-180	0,50-1,40
	5	SS - Austenitic	200-330	-	-	100-160	100-150	0,50-1,40
	6	SS - Austenitic-ferritic (Duplex)	230-260	-	-	80-140	70-130	0,50-1,40
K	7	Malleable Cast Iron	130-230	180-320	170-300	-	-	0,50-1,50
	8	Grey Cast Iron	180-245	170-280	150-250	-	-	0,50-1,50
	9	Nodular Cast iron	160-250	100-240	90-210	-	-	0,50-1,50
S	11	Heat Resistant Super Alloys	200-320	-	-	30-75	30-70	0,50-1,30

(Note 1) Cutting conditions a_e/Dc=70%.
(Note 2) It's possible to occur vibrations in certain cases. Please reduce depth of cut and / or reduce cutting conditions in following cases:
- When using long shank;
- When using long tool overhang with arbor type;
- When application has poor clamping rigidity or when using a low rigidity machine.

(Note 3) PH5... and PHS... can be used wet or dry. PH7... use only air.

PROGRAMMING DATA | Dados para programação | Datos para la programación

Insert	Programming Data			
	Rp	X	b	a_e
POKT 0403...	2,5	1,2	4,3	4,0

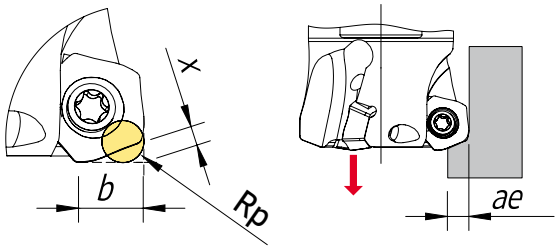

RAMPING AND HELICAL INTERPOLATION

Descida em rampa e interpolação helicoidal | Bajada en rampa e interpolación circular

Ramping

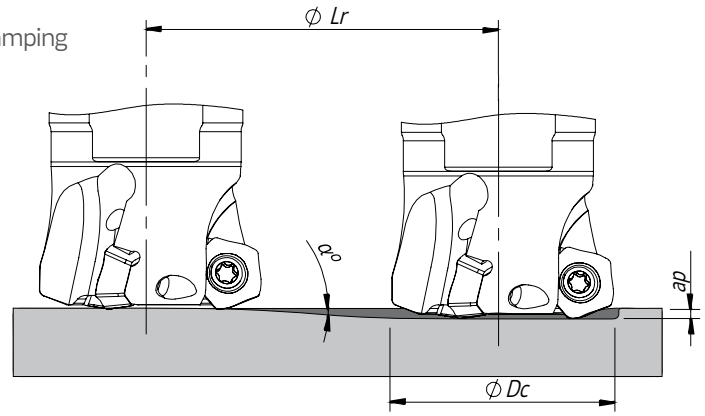

Helical Interpolation

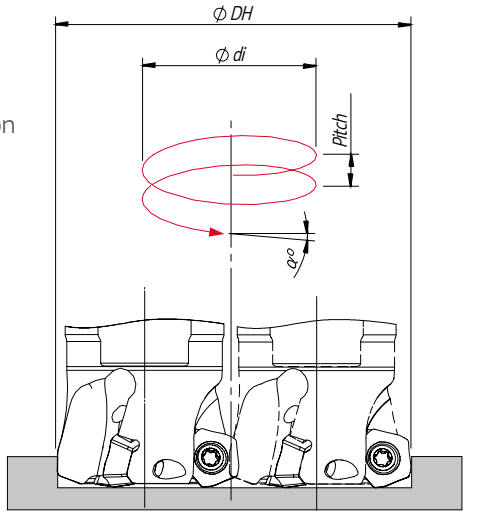

Ødi = ØDH - ØDc

ØDc	Ramping			Helical Interpolation		
	Max Ramp a°	Max a_p	Min Lr	ØDHmin	ØDHmax	Max Pitch/Rev.
16	15	1,0	3,7	23,4 -	- 30,0	6 11
20	9,0	1,0	6,3	31,4 -	- 38,0	5 8
25	5,0	1,0	11,4	41,4 -	- 48,0	4 6
32	3,4	1,0	16,8	55,4 -	- 62,0	4 5
35	3,0	1,0	19,1	61,4 -	- 68,0	4 5
40	2,0	1,0	28,6	71,4 -	- 78,0	3 4
42	2,0	1,0	28,6	84,0 -	- 82,0	4 4
50	2,0	1,0	28,6	91,4 -	- 98,0	4 5
52	2,0	1,0	28,6	95,4 -	- 102,0	4 5
63	2,0	1,0	28,6	117,4 -	- 124,0	5 6
66	1,8	1,0	31,8	123,4 -	- 130,0	5 6

Note: During helical interpolation do not exceed max Pitch.

PLUNGING | Mergulho | Plunge

L≤3Dc	L>3Dc	S max.
f_z (mm/t)		
0,08-0,15	0,05 - 0,10	$Smax = \sqrt{DC.Dr-Dr^2}$

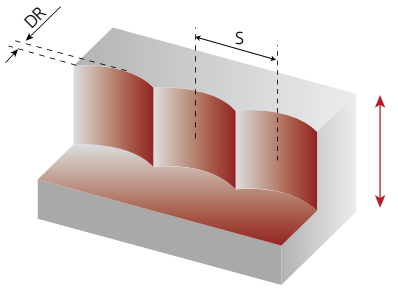

S max and DR corresponding cutting diameter Dc (mm)											
DR (mm)	Dc (mm) POKT 04...										
	16	20	25	32	35	40	42	50	52	63	66
1,0	3,9	4,4	4,9	5,7	5,8	6,2	6,4	7,0	7,1	7,9	8,1
2,0	5,3	6,0	6,8	2,7	8,1	8,7	8,9	9,8	10,0	11,0	11,3
3,0	6,2	7,1	8,1	9,3	9,8	10,5	10,8	11,9	12,1	13,4	13,7
4,0	6,9	8,0	9,2	10,6	11,1	12,0	12,3	13,6	13,9	15,4	15,7

Note: Recommended for L ≤ 4 Dc for extra long tool this step and side cut must be reduced.

page A-236
page A -244



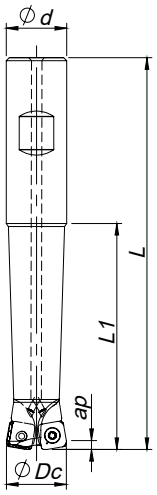

Weldon Shank

K_r=10° | γ_p=+2° | γ_f=+2° | R_p=2,0

Order code Código	Reference Referência Referencia		Dimensions | Dimensões | Dimensiones (mm)				Kg	Specifications	Insert Pastilha Inserto	Stock
			ØDc	Ød/M	L	L1		Ap max (mm)		
181076300	020W06410-02-02-020130	2	20	20	130	75	0,360	1,00	SO...0803...	◉
181080900	020W06410-02-02-020190	2	20	20	190	110	0,340	1,00	SO...0803...	◉
181076400	025W06410-03-02-025140	3	25	25	140	80	0,410	1,00	SO...0803...	◉
181081100	025W06410-03-02-025200	3	25	25	200	130	0,570	1,00	SO...0803...	◉
181076500	032W06410-04-02-032150	4	32	32	150	90	0,760	1,00	SO...0803...	◉
181081300	032W06410-04-02-032200	4	32	32	200	130	1,010	1,00	SO...0803...	◉

◉ Stock item | Produto de stock | Itens de stock

○ Available under request (see page A-6) | Disponível sobre consulta (consulte a página A-6) | Disponible bajo consulta (mire pagina A-6)



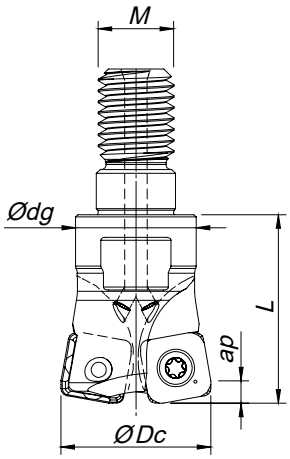

Threaded Coupling

K_r=10° | γ_p=+2° | γ_f=+2° | R_p=2,0

Order code Código	Reference Referência Referencia		Dimensions | Dimensões | Dimensiones (mm)				Kg	Specifications	Insert Pastilha Inserto	Stock
			ØDc	Ød/M	Ødg	L		Ap max (mm)		
181071900	020R06410-02-02-M10025	2	20	M10	16	25	0,040	1,00	SO...0803...	◉
181076600	025R06410-03-02-M12028	3	25	M12	21	28	0,070	1,00	SO...0803...	◉
181076700	032R06410-04-02-M16035	4	32	M16	29	35	0,160	1,00	SO...0803...	◉
181076800	035R06410-04-02-M16035	4	35	M16	29	35	0,180	1,00	SO...0803...	◉
181076900	042R06410-05-02-M16035	5	42	M16	29	35	0,220	1,00	SO...0803...	◉

◉ Stock item | Produto de stock | Itens de stock

○ Available under request (see page A-6) | Disponível sobre consulta (consulte a página A-6) | Disponible bajo consulta (mire pagina A-6)

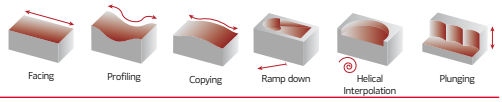

SO...0803... | Inserts | Pastilhas | Plaquitas

SOEW



SOET



SOEW

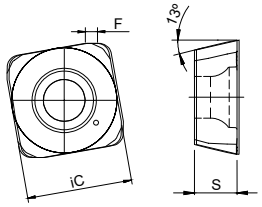

SOET

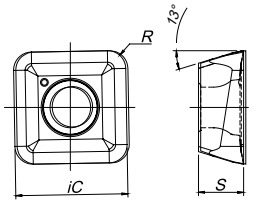

		P						M				K						N		S			H	Dimensions Dimensões Dimensiones (mm)				
		CVD	PVD					CVD	PVD			CVD		PVD				UNC	PCD	CVD	PVD		PVD					
	(2) Grade code	T9	P7	G1	G4	P3	G6	R1	G4	P3	G6	L5	L9	G1	G4	P3	G6	10	D6	R1	P3	G6	P7					
(1) Geometry code	ISO Reference	PH5740	PH7603	PH7910	PH7920	PH7930	PH7740	PHM740	PH7920	PH7930	PH7740	PH5705	PH5740	PH7910	PH7920	PH7930	PH7740	PH0910	PDP410	PHM740	PH7930	PH7740	PH7603	iC	S	I	R	F
1111884	SOEW 080310 S			◈	◈									◈	◈									8,60	3,47	-	1,0	1,0
1112149	SOET 080315-MS					◈	◈	◈		◈	◈									◈	◈	◈		8,60	3,47	-	1,5	-

◈ First choice | Primeira opção | 1ª opción ◈ Stock item | Produto de stock | Itens de stock ◯ Available under request (see page A-7) | Disponível sobre consulta (consulte a página A-7) | Disponible bajo consulta (mire pagina A-7)

Insert order code = (1) Geometry Code + (2) Grade Code

SPARE PARTS | Complementos | Repuestos

Order separately

Cutter ØDc	Insert Screw	Key (Torx)	Key (Torx - Nm)	Torque Value
W06410 – 20 - 32	P0300800	XT09	DT0914	1,4
R06410 – 20 - 42	P0300800	XT09	DT0914	1,4

Note: The toolholder is supplied with the XT/PT key. To order the DT key please check the page A-243.
Check the procedures for the clamping screws on the page A-243.

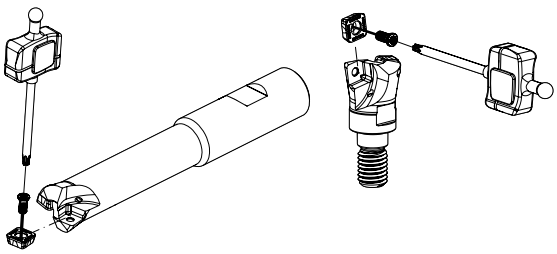

PROGRAMMING DATA | Dados para programação | Datos para la programación

Insert	Programming Data			
	Rp	X	b	a_e
SO... 0803..	2,0	0,8	6,8	6,3

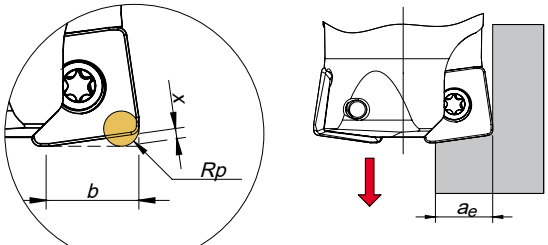

page A-236
page A -244

HIFEED 06410

GRADES SELECTION GUIDE | Guia para selecção de graus | Tabla para selección de calidades

ISO	PSM	Material	HB (Brinell)	Grades ← Wear Resistance — Toughness → PH7910	PH7920	PH7930	PH7740	PHM740
P	1	Unalloyed Steel	125-220	✓	✓	✓	✓	
	2	Low-Alloyed Steel	220-280	✓	✓	✓	✓	
	3	High-Alloyed Steel	280-380	✓	✓	✓	✓	
M	4	SS - Ferritic / Martensitic	200-330			✓	✓	✓
	5	SS - Austenitic	200-330			✓	✓	✓
	6	SS - Austenitic-ferritic (Duplex)	230-260			✓	✓	✓
K	7	Malleable Cast Iron	130-230	✓	✓			
	8	Grey Cast Iron	180-245	✓	✓			
	9	Nodular Cast iron	160-250	✓	✓			
S	11	Heat Resistant Super Alloys	200-320			✓		✓

Good Conditions
Average Conditions
Difficult Conditions

RECOMMENDED CUTTING CONDITIONS | Condições de corte recomendadas | Condiciones de corte recomendables

ISO	PSM	Material	HB (Brinell)	Vc (m/min) ← Wear Resistance — Toughness → PH7910	PH7920	PH7930	PH7740	PHM740	Feed fz (mm/t) SOEW 08...	SOET 08...
P	1	Unalloyed Steel	125-220	160-280	150-230	140-220	100-180	-	0,40-1,80	0,40-1,80
	2	Low-Alloyed Steel	220-280	150-230	140-220	130-180	90-170	-	0,40-1,80	0,40-1,80
	3	High-Alloyed Steel	280-380	140-190	130-180	100-170	80-140	-	0,30-1,50	0,30-1,30
M	4	SS - Ferritic / Martensitic	200-330	-	-	130-220	100-180	100-180	-	0,40-1,30
	5	SS - Austenitic	200-330	-	-	120-180	90-150	90-150	-	0,40-1,30
	6	SS - Austenitic-ferritic (Duplex)	230-260	-	-	70-140	70-120	70-120	-	0,10-1,00
K	7	Malleable Cast Iron	130-230	160-350	150-310	-	-	-	0,50-1,80	-
	8	Grey Cast Iron	180-245	150-300	140-260	-	-	-	0,50-1,80	-
	9	Nodular Cast iron	160-250	120-260	100-220	-	-	-	0,50-1,50	-
S	11	Heat Resistant Super Alloys	200-320	-	-	35-65	25-60	25-60	-	0,40-1,00

(Note 1) Cutting conditions $a_e/Dc=70\%$.

(Note 2) It's possible to occur vibrations in certain cases. Please reduce depth of cut and / or reduce cutting conditions in the following cases:
- When using long shank;
- When using long tool overhang with arbor type;
- When application has poor clamping rigidity or when using a low rigidity machine.

(Note 3) PH5... and PHS... can be used wet or dry. PH7... use only air.

(Note 4) It's possible to occur vibrations in certain cases. Please reduce depth of cut and / or reduce cutting conditions in the following cases:
- When using long shank;
- When using long tool overhang with arbor type;
- When application has poor clamping rigidity or when using a low rigidity machine.

CHIP-BREAKER SELECTION GUIDE | Guia para aplicações do quebra-aparas | Guía para aplicación del rompevirutas

ISO	PSM	Material	HB (Brinell)	Chip-Breaker Application 1st choise	Dificult Operations
P	1	Unalloyed Steel	125-220	SOET 08...	SOEW 08...
	2	Low-Alloyed Steel	220-280	SOEW 08...	-
	3	High-Alloyed Steel	280-380	SOEW 08...	-
M	4	SS - Ferritic / Martensitic	200-330	SOET 08...	-
	5	SS - Austenitic	200-330	SOET 08...	-
	6	SS - Austenitic-ferritic (Duplex)	230-260	SOET 08...	-
K	7	Malleable Cast Iron	130-230	SOET 08...	SOEW 08...
	8	Grey Cast Iron	180-245	SOEW 08...	-
	9	Nodular Cast iron	160-250	SOEW 08...	-
S	11	Heat Resistant Super Alloys	200-320	SOET 08...	-

RAMPING AND HELICAL INTERPOLATION

Descida em rampa e interpolação helicoidal | Bajada en rampa e interpolación circular

Ramping

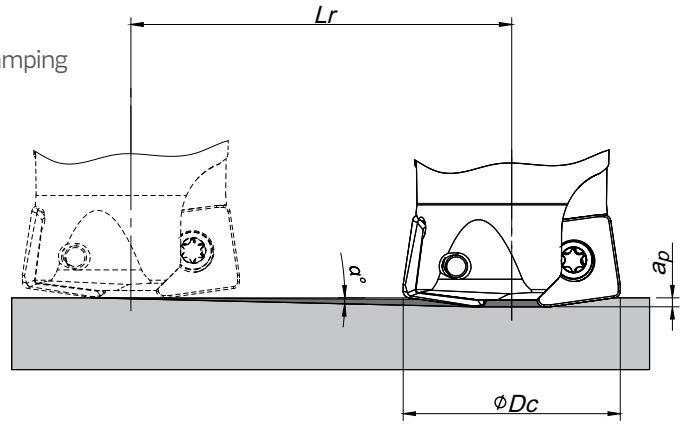

Helical Interpolation

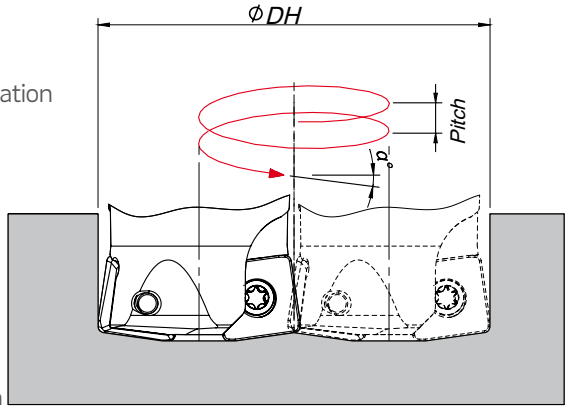

Blind hole
Flat bottom

Ødi = ØDH - ØDc

ØDc	Ramping			Helical Interpolation		
	Max Ramp a°	Max a_p	Min Lr	ØDHmin	ØDHmax	Max Pitch/Rev.
20	15	1,0	3,2	26,4 -	- 38,0	6 17
25	9,5	1,0	6,0	36,4	- 48,0	5 12
32	5,5	1,0	10,4	50,4 -	- 62,0	5 9
35	4,5	1,0	12,7	56,4 -	- 68,0	5 8
42	3,5	1,0	16,3	70,4 -	- 82,0	5 7

Note: During helical interpolation do not exceed max Pitch.

PLUNGING | Mergulho | Plunge

L≤3Dc	L>3Dc	S max.
f_z (mm/t)		
0,08-0,15	0,05-0,10	$Smax = \sqrt{DC.DR-DR^2}$

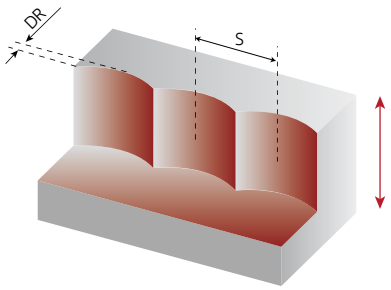

S max and DR corresponding cutting diameter Dc (mm)					
DR (mm)	Dc (mm)				
	20	25	32	35	42
1,0	4,4	4,9	5,6	5,8	6,4
2,0	6,0	6,8	7,7	8,1	8,9
3,0	7,1	8,1	9,3	9,8	10,8
4,0	8,0	9,2	10,6	11,1	12,3
5,0	8,7	10,0	11,6	12,2	13,6
6,0	9,2	10,7	12,5	13,2	14,7

Note: Recommended for L ≤ 4 Dc for extra long tool this step and side cut must be reduced.

page A-236
page A -244



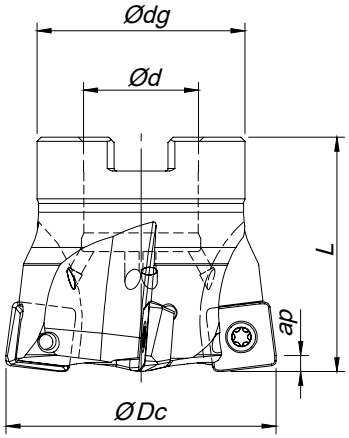

Arbor Mounting

K_r=10° | γ_p=+5° | R_p=2,5

Order code Código	Reference Referência Referencia		Dimensions | Dimensões | Dimensiones (mm)				Kg	Specifications		Insert Pastilha Inserto	Stock
			ØDc	Ød/M	Ødg	L		Ap max (mm)	Arbor Type		
181069100	050A06690-04-05-022045	4	50	22	40	45	0,274	1,50	A	SO...13M5...	◈
181029800	052A06690-04-05-022045	4	52	22	40	45	0,290	1,50	A	SO...13M5...	◈
181033500	063A06690-05-05-027050	5	63	27	48	50	0,500	1,50	A	SO...13M5...	◈
181029900	066A06690-05-05-027050	5	66	27	48	50	0,550	1,50	A	SO...13M5...	◈
181030000	080A06690-06-05-027050	6	80	27	60	50	0,955	1,50	A	SO...13M5...	◈
181113100	100A06690-08-05-032050	8	100	32	70	50	1,500	1,50	A	SO...13M5...	◈

◈ Stock item | Produto de stock | Itens de stock

◯ Available under request (see page A-6) | Disponível sobre consulta (consulte a página A-6) | Disponible bajo consulta (mire pagina A-6)



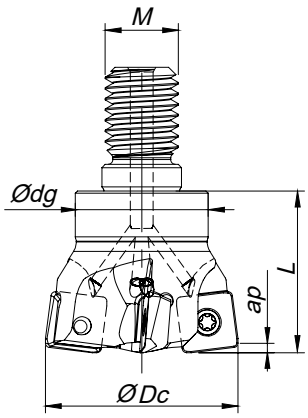

Threaded Coupling

K_r=10° | γ_p=+5° | R_p=2,5

Order code Código	Reference Referência Referencia		Dimensions | Dimensões | Dimensiones (mm)				Kg	Specifications	Insert Pastilha Inserto	Stock
			ØDc	Ød/M	Ødg	L		Ap max (mm)		
181038700	032R06690-03-05-M16035	3	32	M16	29	35	0,145	1,50	SO...13M5	◈
181064600	035R06690-03-05-M16035	3	35	M16	29	35	0,163	1,50	SO...13M5	◈
181038800	042R06690-04-05-M16035	4	42	M16	29	35	0,194	1,50	SO...13M5	◈

◈ Stock item | Produto de stock | Itens de stock

◯ Available under request (see page A-6) | Disponível sobre consulta (consulte a página A-6) | Disponible bajo consulta (mire pagina A-6)

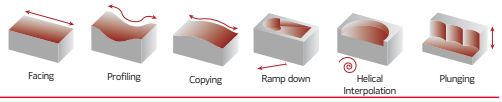

SO...13M5... | Inserts | Pastilhas | Plaquitas

SOEW



SOET



SOEW

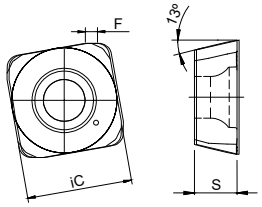

SOET

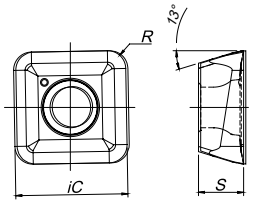

		P						M				K					N		S				H	Dimensions Dimensões Dimensiones (mm)				
		CVD	PVD					CVD	PVD			CVD		PVD			UNC	PCD	CVD	PVD			PVD					
	(2) Grade code	T9	P7	G1	G4	P3	G6	R1	G4	P3	G6	L5	L6	G1	G4	P3	10	D6	R1	P3	G6	P7					
(1) Geometry code	ISO Reference	PH5740	PH7603	PH7910	PH7920	PH7930	PH7740	PHM740	PH7920	PH7930	PH7740	PH5705	PH5320	PH7910	PH7920	PH7930	PH0910	PDP410	PHM740	PH7930	PH7740	PH7603	iC	S	I	R	F
1111906	SOEW 13M510 S			◬	◬		◬							◬	◬								12,43	5,00	-	1,2	1,0
1112147	SOET 13M520-MS					◬	◬	◬		◬	◬								◬	◬	◬		12,43	5,00	-	2,0	-

◬ First choice | Primeira opção | 1ª opción ◬ Stock item | Produto de stock | Itens de stock ◯ Available under request (see page A-7) | Disponível sobre consulta (consulte a página A-7) | Disponible bajo consulta (mire pagina A-7)

Insert order code = (1) Geometry Code + (2) Grade Code

SPARE PARTS | Complementos | Repuestos

Order separately

Cutter ØDc	Insert Screw	Key (Torx)	Key (Torx - Nm)	Torque Value
W06690 – 32 - 42	P0401200	XT15	DT1530	3,0
R06690 – 50 - 80	P0401200	XT15	DT1530	3,0

Note: The toolholder is supplied with the XT/PT key. To order the DT key please check the page A-243.
Check the procedures for the clamping screws on the page A-243.

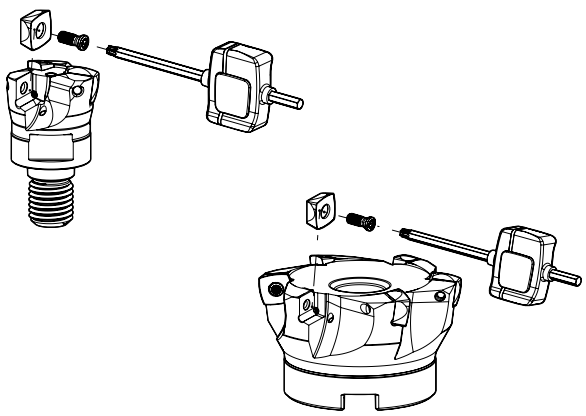

page A-236 page A -244

HIFEED 06690

GRADES SELECTION GUIDE | Guia para selecção de graus | Tabla para selección de calidades

ISO	PSM	Material	HB (Brinell)	Grades ← Wear Resistance — Toughness → PH7910	PH7920	PH7930	PH7740	PHM740
P	1	Unalloyed Steel	125-220	✓	✓	✓	✓	
	2	Low-Alloyed Steel	220-280	✓	✓	✓	✓	
	3	High-Alloyed Steel	280-380	✓	✓	✓	✓	
M	4	SS - Ferritic / Martensitic	200-330				✓	✓
	5	SS - Austenitic	200-330				✓	✓
	6	SS - Austenitic-ferritic (Duplex)	230-260				✓	✓
K	7	Malleable Cast Iron	130-230	✓	✓		✓	
	8	Grey Cast Iron	180-245	✓	✓		✓	
	9	Nodular Cast iron	160-250	✓	✓		✓	
S	11	Heat Resistant Super Alloys	200-320			✓	✓	✓

Good Conditions
Average Conditions
Difficult Conditions

RECOMMENDED CUTTING CONDITIONS | Condições de corte recomendadas | Condiciones de corte recomendables

ISO	PSM	Material	HB (Brinell)	Vc (m/min) ← Wear Resistance — Toughness → PH7910	PH7920	PH7930	PH7740	PHM740	Feed fz (mm/t) SOEW 13...	SOET 13...
P	1	Unalloyed Steel	125-220	160-280	150-230	140-220	100-180	-	0,50-2,20	0,50-2,00
	2	Low-Alloyed Steel	220-280	150-230	140-220	130-180	90-170	-	0,50-2,20	0,50-2,00
	3	High-Alloyed Steel	280-380	140-190	130-180	100-170	80-140	-	0,50-2,00	0,50-1,80
M	4	SS - Ferritic / Martensitic	200-330	-	-	130-220	100-180	100-180	-	0,50-1,80
	5	SS - Austenitic	200-330	-	-	120-180	90-150	90-150	-	0,50-1,80
	6	SS - Austenitic-ferritic (Duplex)	230-260	-	-	70-140	70-120	70-120	-	0,50-1,50
K	7	Malleable Cast Iron	130-230	160-350	150-310	-	120-240	-	0,50-2,20	0,50-2,00
	8	Grey Cast Iron	180-245	150-300	140-260	-	100-200	-	0,50-2,20	0,50-2,00
	9	Nodular Cast iron	160-250	120-260	100-220	-	80-150	-	0,50-2,20	0,50-1,80
S	11	Heat Resistant Super Alloys	200-320	-	-	35-65	25-60	25-60	-	0,40-1,30

(Note 1) Cutting conditions $a_e/Dc=70\%$.

(Note 2) It's possible to occur vibrations in certain cases. Please reduce depth of cut and / or reduce cutting conditions in following cases:
- When using long shank;
- When using long tool overhang with arbor type;
- When application has poor clamping rigidity or when using a low rigidity machine.

(Note 3) PH5... and PHS... can be used wet or dry. PH7... use only air.

(Note 4) It's possible to occur vibrations in certain cases. Please reduce depth of cut and / or reduce cutting conditions in following cases:
- When using long shank;
- When using long tool overhang with arbor type;
- When application has poor clamping rigidity or when using a low rigidity machine.

CHIP-BREAKER SELECTION GUIDE | Guia para aplicações do quebra-aparas | Guía para aplicación del rompevirutas

ISO	PSM	Material	HB (Brinell)	Chip-Breaker Application	
				1st choise	Dificult Operations
P	1	Unalloyed Steel	125-220	SOET 13...	SOEW 13...
	2	Low-Alloyed Steel	220-280	SOEW 13...	-
	3	High-Alloyed Steel	280-380	SOEW 13...	-
M	4	SS - Ferritic / Martensitic	200-330	SOET 13...	-
	5	SS - Austenitic	200-330	SOET 13...	-
	6	SS - Austenitic-ferritic (Duplex)	230-260	SOET 13...	-
K	7	Malleable Cast Iron	130-230	SOET 13...	SOEW 13...
	8	Grey Cast Iron	180-245	SOEW 13...	-
	9	Nodular Cast iron	160-250	SOEW 13...	-
S	11	Heat Resistant Super Alloys	200-320	SOET 13...	-

PROGRAMMING DATA | Dados para programação | Datos para la programación

Insert	Programming Data			
	Rp	X	b	a_e
SO... 13M5..	2,5	1,1	10,5	10,0

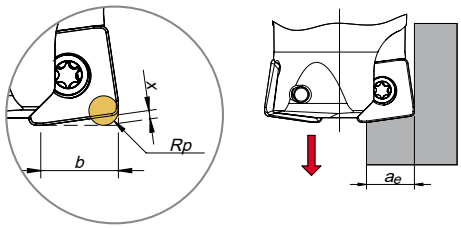

RAMPING AND HELICAL INTERPOLATION

Descida em rampa e interpolação helicoidal | Bajada en rampa e interpolación circular

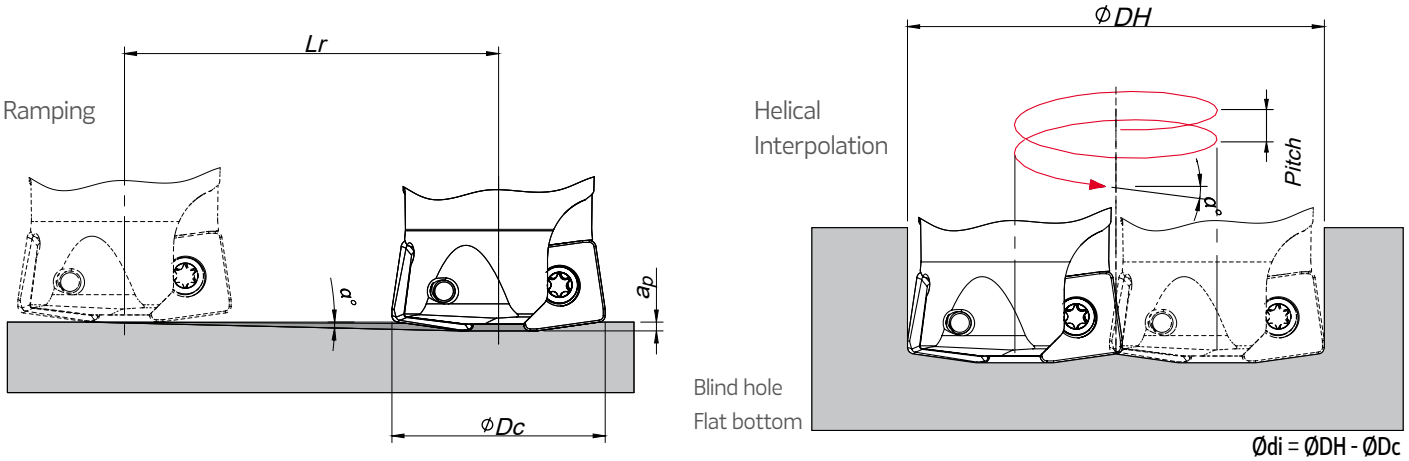

Ødi = ØDH - ØDc

ØDc	Ramping			Helical Interpolation		
	Max Ramp a°	Max a_p	Min Lr	ØDHmin	ØDHmax	Max Pitch/Rev.
32	10,0	1,5	6,0	43 -	- 62,0	6 16
35	9,0	1,5	9,5	49 -	- 68,0	6 16
42	6,4	1,5	13,4	63 -	- 82,0	7 14
50	4,3	1,5	19,9	79 -	- 98,0	6 11
52	4,0	1,5	21,5	83 -	- 102,0	6 10
63	3,0	1,5	28,6	105 -	- 124,0	6 10
66	2,6	1,5	33,0	111 -	- 130,0	6 9
80	2,0	1,5	43,0	139 -	- 158,0	6 8

Note: During helical interpolation do not exceed max Pitch.

page A-236
page A -244

PLUNGING | Mergulho | Plunge

L≤3Dc	L>3Dc	S max.
f_z (mm/t)		
0,10-0,20	0,07-0,14	$Smax = \sqrt{DC.DR-DR^2}$

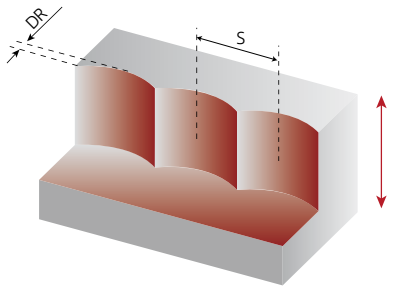

S max and DR corresponding cutting diameter Dc (mm)								
DR (mm)	Dc (mm)							
	32	35	42	50	52	63	66	80
1,0	5,6	5,8	6,4	7,0	7,1	7,9	8,1	8,9
2,0	7,7	8,1	8,9	9,8	10,0	11,0	11,3	12,5
3,0	9,3	9,8	10,8	11,9	12,1	13,4	13,7	15,2
4,0	10,6	11,1	12,3	13,6	13,9	15,4	15,7	17,4
5,0	11,6	12,2	13,6	15,0	15,3	17,0	17,5	19,4
6,0	12,5	13,2	14,7	16,2	16,6	18,5	19,0	21,1
7,0	13,2	14,0	15,7	17,3	17,7	19,8	20,3	22,6
8,0	13,9	14,7	16,5	18,3	18,8	21,0	21,5	24,0
9,0	14,4	15,3	17,2	19,2	19,7	22,0	22,6	25,3
10,0	14,8	15,8	17,9	20,2	20,5	23,0	23,7	26,5

Note: Recommended for L ≤ 4 Dc for extra long tool this step and side cut must be reduced.

page A-236
page A -244

HIFEED 06815



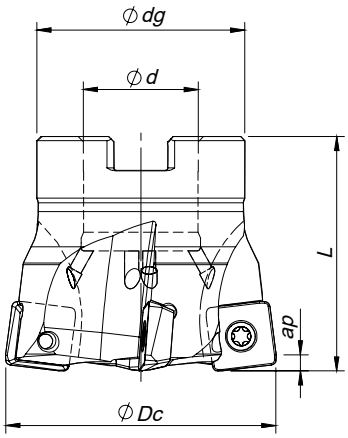

Arbor Mounting

K_r=15° | γ_p=+2° | R_p=4,5

Order code Código	Reference Referência Referencia		Dimensions | Dimensões | Dimensiones (mm)				Kg	Specifications		Insert Pastilha Inserto	Stock
			ØDc	Ød/M	Ødg	L		Ap max (mm)	Arbor Type		
181100400	063A06815-05-02-027050	5	63	27	48	50	0,460	3,50	A	SO...1605...	◉
181081900	066A06815-05-02-027050	5	66	27	48	50	0,500	3,50	A	SO...1605...	◉
181082000	080A06815-06-02-027050	6	80	27	60	50	0,900	3,50	A	SO...1605...	◉
181082100	100A06815-08-02-032050	8	100	32	80	50	1,600	3,50	B	SO...1605...	◉
181082200	125A06815-10-02-040063	10	125	40	90	63	2,900	3,50	B	SO...1605...	◉
181082300	160A06815-12-02-U040063	12	160	40	110	63	4,400	3,50	C	SO...1605...	◉

◉ Stock item | Produto de stock | Itens de stock

○ Available under request (see page A-6) | Disponível sobre consulta (consulte a página A-6) | Disponible bajo consulta (mire pagina A-6)

SO...1605... ‖ Inserts | Pastilhas | Plaquitas

SOEW



SOEW

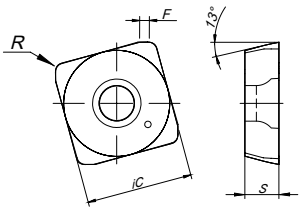

SOET



SOET

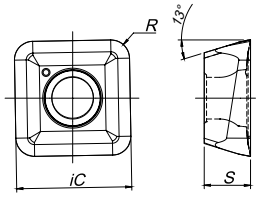

		P						M			K						N		S			H	Dimensions Dimensões Dimensiones (mm)				
		CVD	PVD					CVD	PVD		CVD		PVD				UNC	PCD	CVD	PVD		PVD					
	(2) Grade code	T9	P7	G1	G4	P3	G6	R1	P3	G6	L5	L6	G1	G4	P3	G6	10	D6	R1	P3	G6	P7					
(1) Geometry code	ISO Reference	PHS740	PH7603	PH7910	PH7920	PH7930	PH7740	PHM740	PH7930	PH7740	PH5705	PH5320	PH7910	PH7920	PH7930	PH7740	PH0910	PDP410	PHM740	PH7930	PH7740	PH7603	iC	S	I	R	F
1111907	SOEW 160512 S			◉	◉		◉						◉	◉		◉							16,40	5,26	-	1,20	1,50
1112221	SOET 160520-MS					◉	◉	◉	◉	◉									◉	◉	◉		16,40	5,26	-	2,00	-

◉ First choice | Primeira opção | 1ª opción

◉ Stock item | Produto de stock | Itens de stock

○ Available under request (see page A-7) | Disponível sobre consulta (consulte a página A-7) | Disponible bajo consulta (mire pagina A-7)

Insert order code = (1) Geometry Code + (2) Grade Code

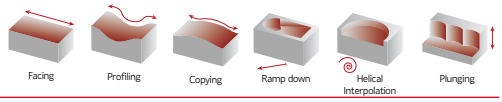

SPARE PARTS | Complementos | Repuestos

Cutter ØDc	Insert Screw	Key (Torx)	Key (Torx - Nm) Order separately	Torque Value	Screw Order separately	DIN 6368 Wrench
A06815 - 63-80	P0501302	PT20	DT2050	5,0	-	-
A06815 - 100	P0501302	PT20	DT2050	5,0	J0123510	SD6368-12
A06815 – 125	P0501302	PT20	DT2050	5,0	J0164110	SD6368-16
A06815 – 160	P0501302	PT20	DT2050	5,0	-	-

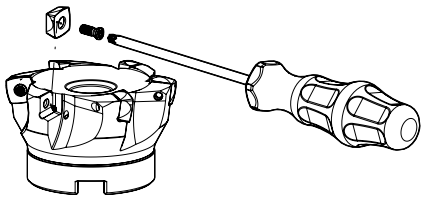

Note: The toolholder is supplied with the XT/PT key. To order the DT key please check the page A-243.
Check the procedures for the clamping screws on the page A-243.

GRADES SELECTION GUIDE | Guia para selecção de graus | Tabla para selección de calidades

ISO	PSM	Material	HB (Brinell)	Grades ← Wear Resistance — Toughness → PH7910	PH7920	PH7930	PH7740	PHM740
P	1	Unalloyed Steel	125-220	✓	✓	✓	✓	
	2	Low-Alloyed Steel	220-280	✓	✓	✓	✓	
	3	High-Alloyed Steel	280-380	✓	✓	✓	✓	
M	4	SS - Ferritic / Martensitic	200-330			✓	✓	✓
	5	SS - Austenitic	200-330			✓	✓	✓
	6	SS - Austenitic-ferritic (Duplex)	230-260			✓	✓	✓
K	7	Malleable Cast Iron	130-230	✓	✓		✓	
	8	Grey Cast Iron	180-245	✓	✓		✓	
	9	Nodular Cast iron	160-250	✓	✓		✓	
S	11	Heat Resistant Super Alloys	200-320			✓	✓	✓

Good Conditions
Average Conditions
Difficult Conditions

RECOMMENDED CUTTING CONDITIONS | Condições de corte recomendadas | Condiciones de corte recomendables

ISO	PSM	Material	HB (Brinell)	Vc (m/min) ← Wear Resistance — Toughness → PH7910	PH7920	PH7930	PH7740	PHM740	Feed fz (mm/t) SOEW 16...	SOET 16...
P	1	Unalloyed Steel	125-220	160-280	150-230	140-220	100-180	-	0,60-2,50	0,50-2,20
	2	Low-Alloyed Steel	220-280	150-230	140-220	130-180	90-170	-	0,60-2,50	0,50-2,20
	3	High-Alloyed Steel	280-380	140-190	130-180	100-170	80-140	-	0,60-2,00	0,50-1,80
M	4	SS - Ferritic / Martensitic	200-330	-	-	130-220	100-180	100-180	-	0,60-2,00
	5	SS - Austenitic	200-330	-	-	120-180	90-150	90-150	-	0,60-2,20
	6	SS - Austenitic-ferritic (Duplex)	230-260	-	-	70-140	70-120	70-120	-	0,50-1,80
K	7	Malleable Cast Iron	130-230	160-350	150-310	-	120-260	-	0,60-2,50	0,50-2,00
	8	Grey Cast Iron	180-245	150-300	140-260	-	130-220	-	0,60-2,50	0,50-2,00
	9	Nodular Cast iron	160-250	120-260	100-220	-	100-180	-	0,60-2,00	0,50-1,80
S	11	Heat Resistant Super Alloys	200-320	-	-	35-65	25-60	25-60	-	0,40-1,80

(Note 1) Cutting conditions a_e/Dc=70%.

(Note 2) It's possible to occur vibrations in certain cases. Please reduce depth of cut and / or reduce cutting conditions in following cases:
- When using long shank;
- When using long tool overhang with arbor type;
- When application has poor clamping rigidity or when using a low rigidity machine.

(Note 3) PH5... and PHS... can be used wet or dry. PH7... use only air.

(Note 4) It's possible to occur vibrations in certain cases. Please reduce depth of cut and / or reduce cutting conditions in following cases:
- When using long shank;
- When using long tool overhang with arbor type;
- When application has poor clamping rigidity or when using a low rigidity machine.

page A-236
page A -244

HIFEED 06815

CHIP-BREAKER SELECTION GUIDE | Guia para aplicações do quebra-aparas | Guía para aplicación del rompevirutas

ISO	PSM	Material	HB (Brinell)	Chip-Breaker Application	
				1st choise	Dificult Operations
P	1	Unalloyed Steel	125-220	SOET 16...	SOEW 16...
	2	Low-Alloyed Steel	220-280	SOEW 16...	-
	3	High-Alloyed Steel	280-380	SOEW 16...	-
M	4	SS - Ferritic / Martensitic	200-330	SOET 16...	-
	5	SS - Austenitic	200-330	SOET 16...	-
	6	SS - Austenitic-ferritic (Duplex)	230-260	SOET 16...	-
K	7	Malleable Cast Iron	130-230	SOET 16...	SOEW 16...
	8	Grey Cast Iron	180-245	SOEW 16...	-
	9	Nodular Cast iron	160-250	SOEW 16...	-
S	11	Heat Resistant Super Alloys	200-320	SOET 16...	-

PROGRAMMING DATA | Dados para programação | Datos para la programación

Insert	Programming Data			
	Rp	X	b	a_e
SO... 1605..	4,5	2,3	13,5	12,8

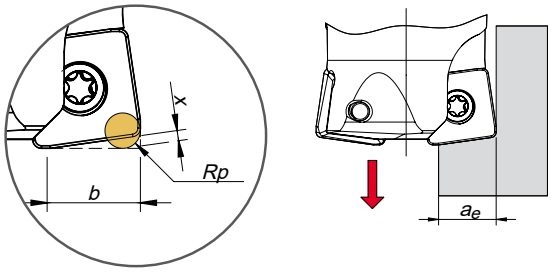

RAMPING AND HELICAL INTERPOLATION

Descida em rampa e interpolação helicoidal | Bajada en rampa e interpolación circular

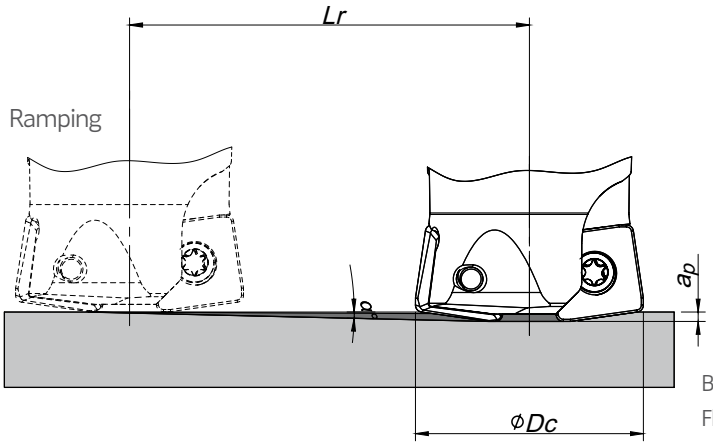

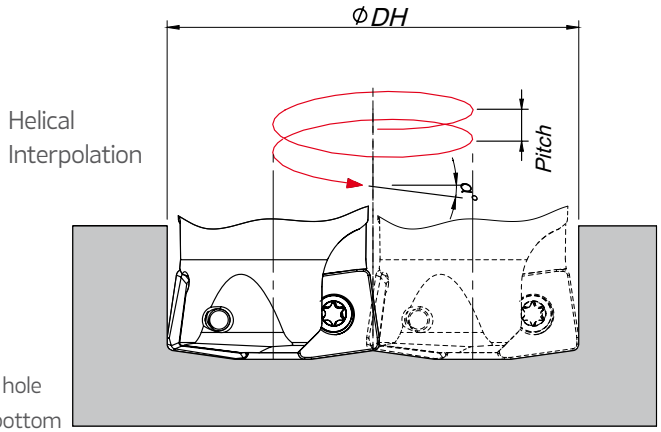

Ødi = ØDH - ØDc

ØDc	Ramping			Helical Interpolation		
	Max Ramp a°	Max a_p	Min Lr	ØDHmin	ØDHmax	Max Pitch/Rev.
63	3,5	3,5	80,2	99,0 -	- 123,6	6 11
66	3,0	3,5	66,8	105 -	- 129,6	6 10
80	2,0	3,5	100,2	133 -	- 157,5	5 8
100	1,5	3,5	133,7	173 -	- 197,5	6 8
125	1,0	3,5	200,5	223 -	- 247,5	5 6
160	0,5	3,5	401,1	293 -	- 317,5	3 4

Note: During helical interpolation do not exceed max Pitch.

PLUNGING | Mergulho | Plunge

L≤3Dc	L>3Dc	S max.
f_z (mm/t)		
0,10-0,20	0,07-0,14	$Smax = \sqrt{DC.DR-DR^2}$

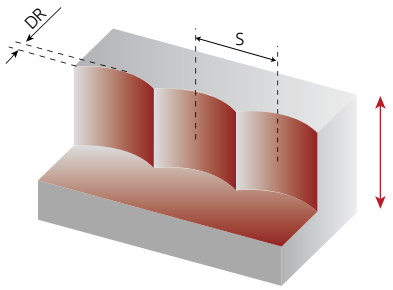

S max and DR corresponding cutting diameter Dc (mm)		
DR (mm)	Dc (mm)	
	66	80
1,0	8,1	8,9
2,0	11,3	12,5
3,0	13,7	15,2
4,0	15,7	17,4
5,0	17,5	19,4
6,0	19,0	21,1
7,0	20,3	22,6
8,0	21,5	24,0
9,0	22,6	25,3
10,0	23,7	26,5
11,0	24,6	27,5
12,0	25,5	28,6

Note: Recommended for L ≤ 4 Dc for extra long tool this step and side cut must be reduced.

page A-236
page A -244

HIFEED 50560



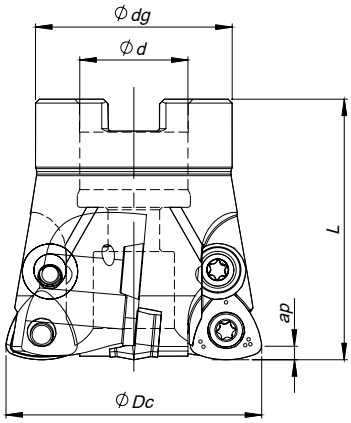

Arbor Mounting

γ_p=+5° | R_p=3,2

Order code Código	Reference Referência Referencia		Dimensions | Dimensões | Dimensiones (mm)				Kg	Specifications		Insert Pastilha Inserto	Stock
			ØDc	Ød	Ødg	L		Ap max (mm)	Arbor Type		
181020800	052C50560-04-05-022053	4	52	22	40	53	0,390	1,5	A	WD... 1204...	◉
181020200	066C50560-05-05-027053	5	66	27	48	53	0,640	1,5	A	WD... 1204...	◉
181020300	080C50560-06-05-027053	6	80	27	60	53	1,060	1,5	A	WD... 1204...	◉
181098200	063A50560-05-05-027050	5	63	27	48	50	0,580	1,5	A	WD... 1204...	◉

◉ Stock item | Produto de stock | Itens de stock

◯ Available under request (see page A-6) | Disponível sobre consulta (consulte a página A-6) | Disponible bajo consulta (mire pagina A-6)

SPARE PARTS | Complementos | Repuestos

ScrewCutter ØDc	Insert Screw	Key (Torx)	Order separately Key (Torx - Nm)	Torque Value	Order separately Washer	Washer Screw
A50560 – 52 - 80	P0451001	XT20	DT2050	5,0	HC01200	P0451001

Note: The toolholder is supplied with the XT/PT key. To order the DT key please check the page A-243.
Check the procedures for the clamping screws on the page A-243.

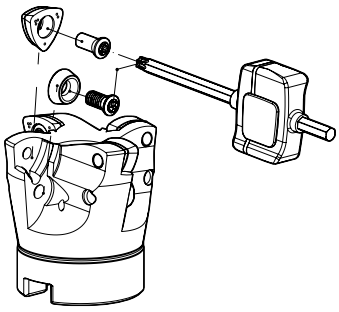

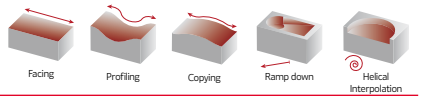

WD... 1204... | Inserts | Pastilhas | Plaquitas

WDET



WDMW



WDET

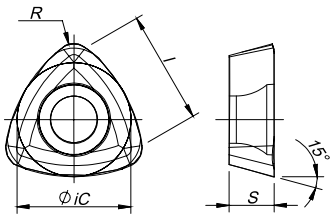

WDMW

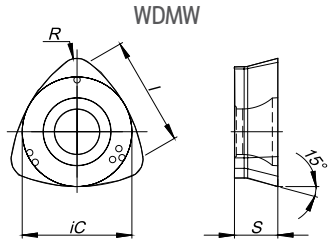

		P						M				K						N		S		H	Dimensions Dimensões Dimensiones (mm)				
		CVD	PVD					CVD	PVD			CVD		PVD				UNC	PCD	PVD		PVD					
	(2) Grade code	T9	P7	G1	G4	P3	G6	R1	G4	P3	G6	L5	L6	G1	G4	P3	G6	10	D6	P3	G6	P7					
(1) Geometry code	ISO Reference	PHS740	PH7603	PH7910	PH7920	PH7930	PH7740	PHM740	PH7920	PH7930	PH7740	PH5705	PH5320	PH7910	PH7920	PH7930	PH7740	PH0910	PDP410	PH7930	PH7740	PH7603	iC	S	l	R	F
1112148	WDET 120420-MS				○	◈	◈			◈	◈									◈	◈		12,00	4,76	11,9	2,00	-
1111123	WDMW 120420-T			○	◈		◈							○	◈		◈						12,00	4,76	11,9	2,00	-

◈ First choice | Primeira opção | 1ª opción ◈ Stock item | Produto de stock | Itens de stock ○ Available under request (see page A-7) | Disponível sobre consulta (consulte a página A-7) | Disponible bajo consulta (mire pagina A-7)

Insert order code = (1) Geometry Code + (2) Grade Code

GRADES SELECTION GUIDE | Guia para selecção de graus | Tabla para selección de calidades

ISO	PSM	Material	HB (Brinell)	Grades ← Wear Resistance — Toughness → PH7910	PH7920	PH7930	PH7740
P	1	Unalloyed Steel	125-220	✓	✓	✓	✓
	2	Low-Alloyed Steel	220-280	✓	✓	✓	✓
	3	High-Alloyed Steel	280-380	✓	✓	✓	✓
M	4	SS - Ferritic / Martensitic	200-330			✓	✓
	5	SS - Austenitic	200-330			✓	✓
	6	SS - Austenitic-ferritic (Duplex)	230-260			✓	✓
K	7	Malleable Cast Iron	130-230	✓	✓		✓
	8	Grey Cast Iron	180-245	✓	✓		✓
	9	Nodular Cast iron	160-250	✓	✓		✓
S	11	Heat Resistant Super Alloys	200-320			✓	✓

● Good Conditions
● Average Conditions
● Difficult Conditions

page A-236
page A -244

HIFEED 50560

RECOMMENDED CUTTING CONDITIONS | Condições de corte recomendadas | Condiciones de corte recomendables

ISO	PSM	Material	HB (Brinell)	Vc (m/min) ← Wear Resistance — Toughness →				Feed fz (mm/t)	
				PH7910	PH7920	PH7930	PH7740	WDMW 12...	WDET 12...
P	1	Unalloyed Steel	125-220	160-280	150-230	140-220	100-180	0,30-1,50	0,30-1,30
	2	Low-Alloyed Steel	220-280	150-230	140-220	130-180	90-170	0,30-1,50	0,30-1,30
	3	High-Alloyed Steel	280-380	140-190	130-180	100-170	80-140	0,30-1,30	0,30-1,00
M	4	SS - Ferritic / Martensitic	200-330	-	-	130-220	100-180	-	0,30-1,30
	5	SS - Austenitic	200-330	-	-	120-180	90-150	-	0,30-1,30
	6	SS - Austenitic-ferritic (Duplex)	230-260	-	-	70-140	70-120	-	0,30-1,00
K	7	Malleable Cast Iron	130-230	160-350	150-310	-	120-240	0,30-1,50	-
	8	Grey Cast Iron	180-245	150-300	140-260	-	100-200	0,30-1,50	-
	9	Nodular Cast iron	160-250	120-260	100-220	-	80-150	0,30-1,40	-
S	11	Heat Resistant Super Alloys	200-320	-	-	35-65	25-45	-	0,30-1,00

(Note 1) Cutting conditions $a_e/Dc=70\%$.

(Note 2) It's possible to occur vibrations in certain cases. Please reduce depth of cut and / or reduce cutting conditions in following cases:
- When using long shank;
- When using long tool overhang with arbor type;
- When application has poor clamping rigidity or when using a low rigidity machine.

(Note 3) PH5... and PHS... can be used wet or dry. PH7... use only air.

(Note 4) It's possible to occur vibrations in certain cases. Please reduce depth of cut and / or reduce cutting conditions in following cases:
- When using long shank;
- When using long tool overhang with arbor type;
- When application has poor clamping rigidity or when using a low rigidity machine.

When using WDET insert, please remove the washer and the washer screw, otherwise it will break the insert.

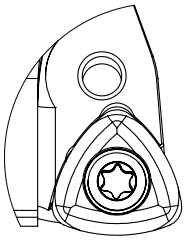

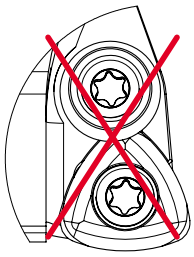

CHIP-BREAKER SELECTION GUIDE | Guia para aplicações do quebra-aparas | Guía para aplicación del rompevirutas

ISO	PSM	Material	HB (Brinell)	Chip-Breaker Application	
				1st choise	Dificult Operations
P	1	Unalloyed Steel	125-220	WDET 12...	WDMW 12...
	2	Low-Alloyed Steel	220-280	WDMW 12...	-
	3	High-Alloyed Steel	280-380	WDMW 12...	-
M	4	SS - Ferritic / Martensitic	200-330	WDET 12...	-
	5	SS - Austenitic	200-330	WDET 12...	-
	6	SS - Austenitic-ferritic (Duplex)	230-260	WDET 12...	-
K	7	Malleable Cast Iron	130-230	WDMW 12...	-
	8	Grey Cast Iron	180-245	WDMW 12...	-
	9	Nodular Cast iron	160-250	WDMW 12...	-
S	11	Heat Resistant Super Alloys	200-320	WDET 12...	-

PROGRAMMING DATA | Dados para programação | Datos para la programación

Insert	Programming Data			
	Rp	x	b	a_e
WD... 1204	3,2	0,7	7,2	7,0

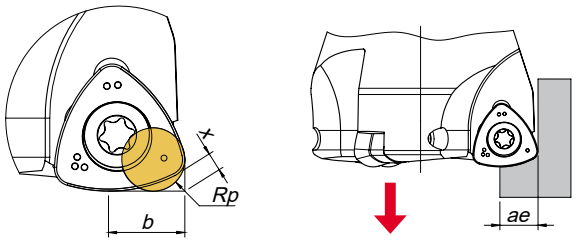

RAMPING AND HELICAL INTERPOLATION

Descida em rampa e interpolação helicoidal | Bajada en rampa e interpolación circular

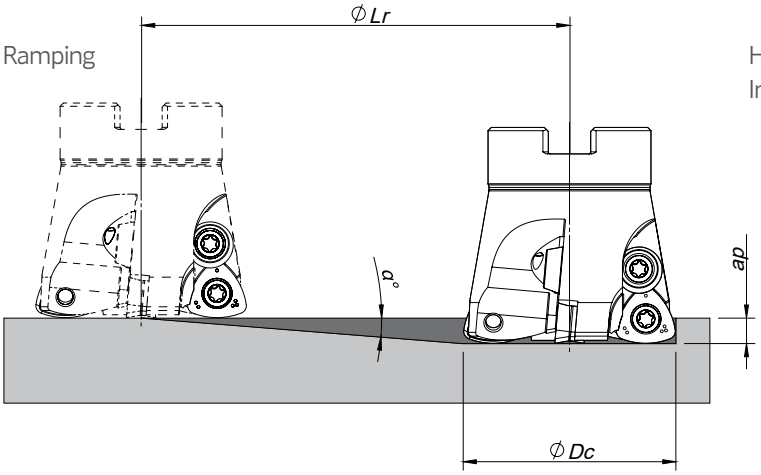

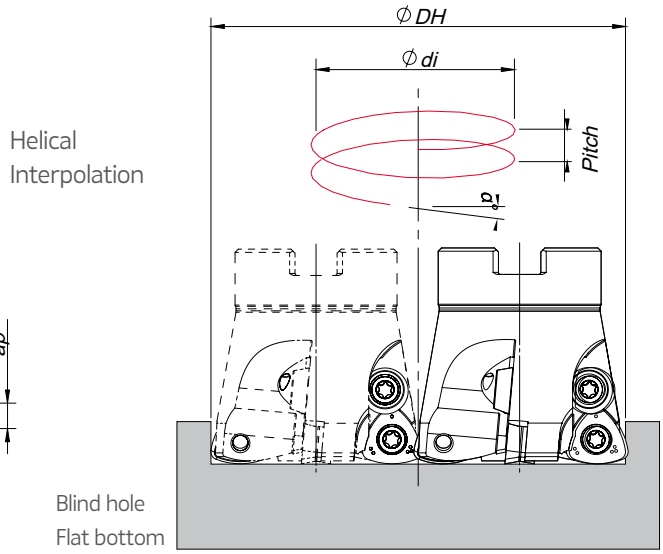

Ødi = ØDH - ØDc

ØDc	Ramping			Helical Interpolation		
	Max Ramp a°	Max a_p	Min Lr	ØDHmin	ØDHmax	Max Pitch/Rev.
52	0,8	1,5	107,4	89,6 -	- 102,0	1 2
66	0,4	1,5	214,9	117,6 -	- 130,0	1 1
80	0,3	1,5	286,5	145,6 -	- 158,0	1 1

Note: During helical interpolation do not exceed max Pitch.

page A-236
page A -244

HIFEED 50060



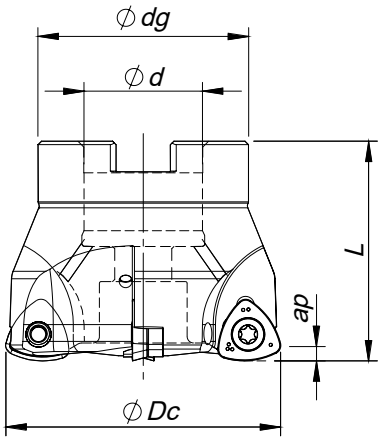

Arbor Mounting

γ_p=0° | R_p=3,5

Order code Código	Reference Referência Referencia		Dimensions | Dimensões | Dimensiones (mm)				Kg	Specifications		Insert Pastilha Inserto	Stock
			ØDc	Ød/M	Ødg	L		Ap max (mm)	Arbor Type		
181020400	052A50060-03-022045	3	52	22	40	45	0,320	1,8	A	WN... 1207	◈
181033900	063A50060-04-027050	4	63	27	48	50	0,547	1,8	A	WN... 1207	◈
181028700	066A50060-04-027050	4	66	27	48	50	0,597	1,8	A	WN... 1207	◈
181035900	066A50060-05-027050	5	66	27	48	50	0,610	1,8	A	WN... 1207	◈
181020100	080A50060-05-027050	5	80	27	60	50	1,000	1,8	A	WN... 1207	◈

◈ Stock item | Produto de stock | Itens de stock

◯ Available under request (see page A-6) | Disponível sobre consulta (consulte a página A-6) | Disponible bajo consulta (mire pagina A-6)



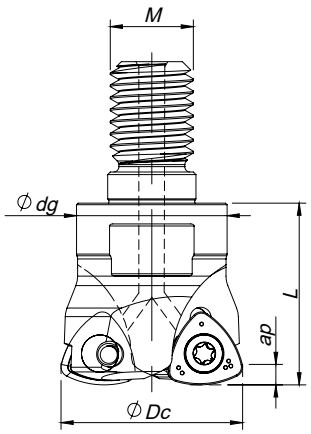

Threaded Coupling

γ_p=0° | R_p=3,5

Order code Código	Reference Referência Referencia		Dimensions | Dimensões | Dimensiones (mm)				Kg	Specifications	Insert Pastilha Inserto	Stock
			ØDc	Ød/M	Ødg	L		Ap max (mm)		
181039000	035R50060-02-M16035	2	35	M16	29	35	0,166	1,8	WN... 1207	◈

◈ Stock item | Produto de stock | Itens de stock

◯ Available under request (see page A-6) | Disponível sobre consulta (consulte a página A-6) | Disponible bajo consulta (mire pagina A-6)

Facing | Profiling | Copying | Ramp down | Helical Interpolation | Plunging

WNMW 1207 | Inserts | Pastilhas | Plaquitas

WNMW



WNMW

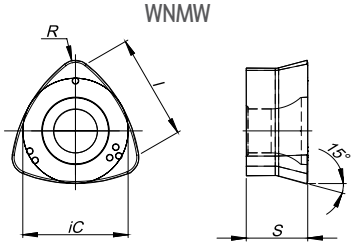

		P								M				K						N		S		H	Dimensions Dimensões Dimensiones (mm)				
		CVD	PVD							CVD	PVD			CVD	PVD					UNC	PCD	PVD		PVD					
	(2) Grade code	T9	P7	G1	G4	P3	78	86	G6	R1	G4	P3	G6	L5	L6	G1	G4	P3	G6	10	D6	P3	G6	P7					
(1) Geometry code	ISO Reference	PHS740	PH7603	PH7910	PH7920	PH7930	PH6125	PH6135	PH7740	PHM740	PH7920	PH7930	PH7740	PH5705	PH5320	PH7910	PH7920	PH7930	PH7740	PH0910	PDP410	PH7930	PH7740	PH7603	iC	S	I	R	F
1121148	WNMW 1207-SP			◉	◉		◉	◉	○							◉	◉		○						12,00	7,00	11,90	2,00	-

◉ First choice | Primeira opção | 1ª opción ◉ Stock item | Produto de stock | Itens de stock ○ Available under request (see page A-7) | Disponível sobre consulta (consulte a página A-7) | Disponible bajo consulta (mire pagina A-7)

Insert order code = (1) Geometry Code + (2) Grade Code

SPARE PARTS | Complementos | Repuestos

Order separately

Cutter ØDc	Insert Screw	Key (Torx)	Key (Torx - Nm)	Torque Value
			Nm	Nm
R50060 – 35	P0451400	XT20	DT2050	5,0
A50060 – 52 - 80	P0451400	XT20	DT2050	5,0

Note: The toolholder is supplied with the XT/PT key. To order the DT key please check the page A-243.
Check the procedures for the clamping screws on the page A-243.

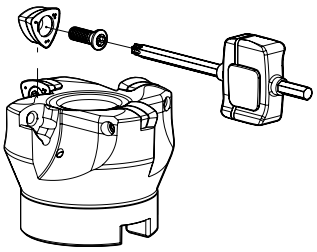

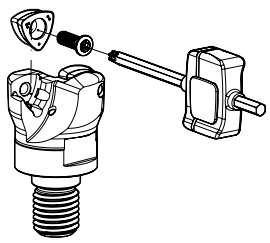

GRADES SELECTION GUIDE | Guia para selecção de graus | Tabla para selección de calidades

ISO	PSM	Material	HB (Brinell)	Grades ← Wear Resistance — Toughness → PH7910	PH7920	PH6125	PH6135
P	1	Unalloyed Steel	125-220	✓	✓	✓	✓
	2	Low-Alloyed Steel	220-280	✓	✓	✓	✓
	3	High-Alloyed Steel	280-380	✓	✓	✓	✓
K	7	Malleable Cast Iron	130-230	✓	✓		
	8	Grey Cast Iron	180-245	✓	✓		
	9	Nodular Cast iron	160-250	✓	✓		

◉ Good Conditions
◉ Average Conditions
◉ Difficult Conditions

page A-236 | page A -244

HIFEED 50060

RECOMMENDED CUTTING CONDITIONS ‖ Condições de corte recomendadas | Condiciones de corte recomendables

ISO	PSM	Material	HB (Brinell)	Vc (m/min) ← Wear Resistance			Toughness →	Feed fz (mm/t)
				PH7910	PH7920	PH6125	PH6135	WNMW 12...
P	1	Unalloyed Steel	125-220	160-280	150-230	160-190	100-180	0,30-1,50
	2	Low-Alloyed Steel	220-280	150-230	140-220	140-180	90-170	0,30-1,50
	3	High-Alloyed Steel	280-380	140-190	130-180	130-160	80-140	0,30-1,30
K	7	Malleable Cast Iron	130-230	160-350	150-310	-	-	0,30-1,50
	8	Grey Cast Iron	180-245	150-300	140-260	-	-	0,30-1,50
	9	Nodular Cast iron	160-250	120-260	100-220	-	-	0,30-1,40

(Note 1) Cutting conditions a_e/Dc=70%.

(Note 2) It's possible to occur vibrations in certain cases. Please reduce depth of cut and / or reduce cutting conditions in following cases:
- When using long shank;
- When using long tool overhang with arbor type;
- When application has poor clamping rigidity or when using a low rigidity machine.

(Note 3) PH5... and PHS... can be used wet or dry. PH7... use only air.

(Note 4) It's possible to occur vibrations in certain cases. Please reduce depth of cut and / or reduce cutting conditions in following cases:
- When using long shank;
- When using long tool overhang with arbor type;
- When application has poor clamping rigidity or when using a low rigidity machine.

PROGRAMMING DATA ‖ Dados para programação | Datos para la programación

Insert	Programming Data			
	Rp	X	b	a_e
WNMW 12	3,5	0,9	8,4	8,0

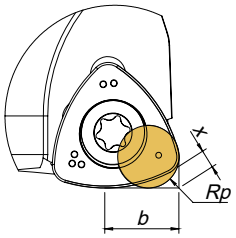

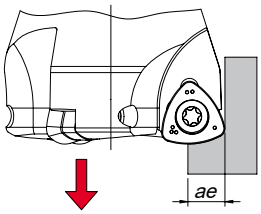

RAMPING AND HELICAL INTERPOLATION

Descida em rampa e interpolação helicoidal | Bajada en rampa e interpolación circular

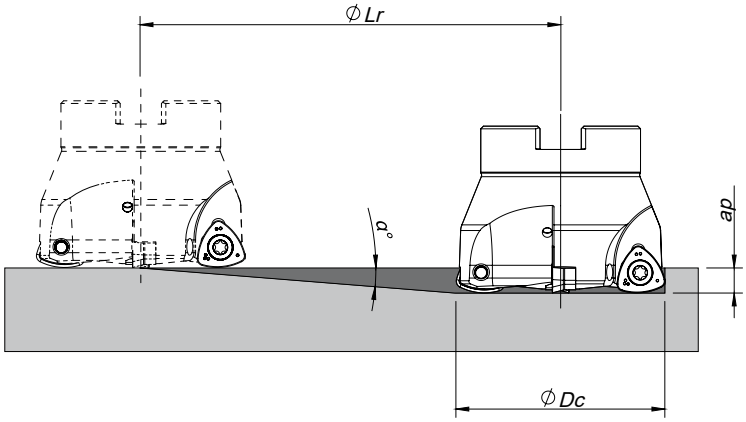

Helical Interpolation

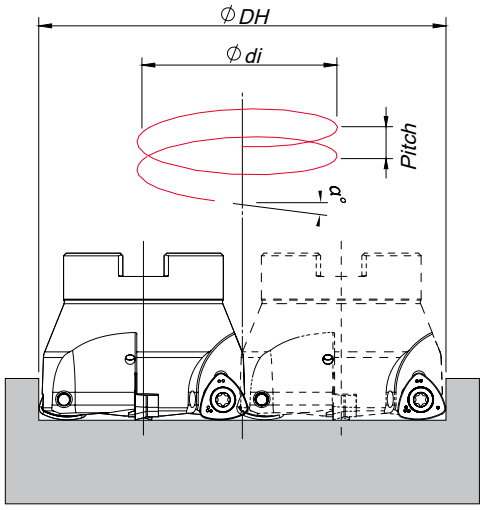

Blind hole
Flat bottom

Ødi = ØDH - ØDc

ØDc	Ramping			Helical Interpolation		
	Max Ramp a°	Max ap	Min Lr	ØDHmin	ØDHmax	Max Pitch/Rev.
35	3,0	1,8	34,3	53,2 -	- 68,0	2 5
52	1,8	1,8	57,3	87,2 -	- 102,0	3 4
63	1,2	1,8	85,9	109,2 -	- 124,0	3 4
66	1,0	1,8	114,6	115,2 -	- 130,0	3 3
80	0,9	1,8	114,6	143,0 -	- 158,0	3 3

Note: During helical interpolation do not exceed max Pitch.

PLUNGING | Mergulho | Plunge

L≤3Dc	L>3Dc	S max.
f_z (mm/t)		
0,10-0,20	0,07-0,14	$Smax = \sqrt{DC.DR-DR^2}$

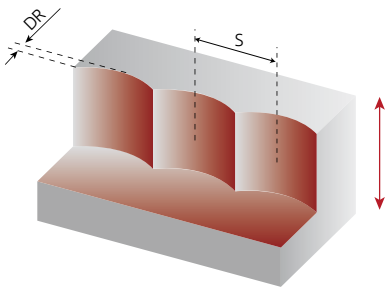

DR (mm)	S max and DR corresponding cutting diameter Dc (mm)				
	Dc (mm)				
	35	52	63	66	80
1,0	5,8	7,1	7,9	8,1	8,9
2,0	8,1	10,0	11,0	11,3	12,5
3,0	9,8	12,1	13,4	13,7	15,2
4,0	11,1	13,9	15,4	15,7	17,4
5,0	12,2	15,3	17,0	17,5	19,4
6,0	13,2	16,6	18,5	19,0	21,1
7,0	14,0	17,7	19,8	20,3	22,6
8,0	14,7	18,8	21,0	21,5	24,0

Note: Recommended for L ≤ 4 Dc, forL > 4DC steps must be reduced to 40%.

page A-236
page A -244

HIFEED 06590



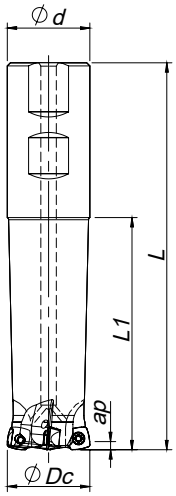

Weldon Shank

γ_p=+5° | R_p=1,8

Order code Código	Reference Referência Referencia		Dimensions | Dimensões | Dimensiones (mm)				Kg	Specifications	Insert Pastilha Inserto	Stock
			ØDc	Ød/M	L	L1		Ap max (mm)		
181047600	020W06590-02-05-020130	2	20	20	130	75	0,250	1,2	SP... 08T3...	◉
181047900	020W06590-02-05-020190	2	20	20	190	110	0,380	1,2	SP... 08T3...	◉
181047700	025W06590-03-05-025140	3	25	25	140	80	0,431	1,2	SP... 08T3...	◉
181048000	025W06590-03-05-025200	3	25	25	200	130	0,611	1,2	SP... 08T3...	◉
181047800	032W06590-04-05-032150	4	32	32	150	90	0,780	1,2	SP... 08T3...	◉
181048100	032W06590-04-05-032200	4	32	32	200	130	1,040	1,2	SP... 08T3...	◉

◉ Stock item | Produto de stock | Itens de stock ○ Available under request (see page A-6) | Disponível sobre consulta (consulte a página A-6) | Disponible bajo consulta (mire pagina A-6)



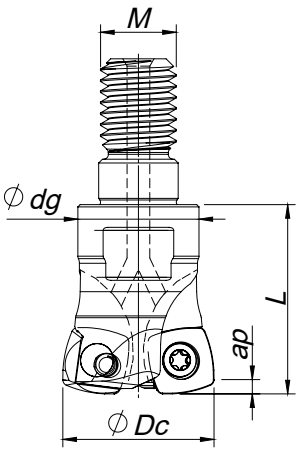

Threaded Coupling

γ=+5° | R_p=1,8

Order code Código	Reference Referência Referencia		Dimensions | Dimensões | Dimensiones (mm)				Kg	Specifications	Insert Pastilha Inserto	Stock
			ØDc	Ød/M	Ødg	L		Ap max (mm)		
181031100	020R06590-02-05-M10025	2	20	M10	16	25	0,040	1,2	SP... 08T3...	◉
181029400	025R06590-03-05-M12028	3	25	M12	21	28	0,071	1,2	SP... 08T3...	◉
181029600	032R06590-04-05-M16035	4	32	M16	29	35	0,162	1,2	SP... 08T3...	◉
181045800	035R06590-04-05-M16035	4	35	M16	29	35	0,176	1,2	SP... 08T3...	◉
181031000	042R06590-05-05-M16035	5	42	M16	29	35	0,215	1,2	SP... 08T3...	◉

◉ Stock item | Produto de stock | Itens de stock ○ Available under request (see page A-6) | Disponível sobre consulta (consulte a página A-6) | Disponible bajo consulta (mire pagina A-6)

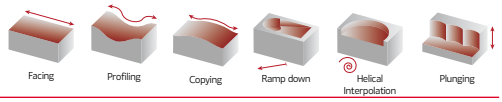

SP...08T3... | Inserts | Pastilhas | Plaquitas

SPKW



SPKT



SPKW | SPKT

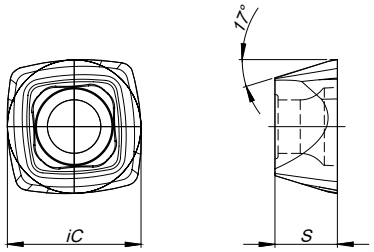

		P						M				K							N		S		H	Dimensions Dimensões Dimensiones (mm)				
		CVD	PVD					CVD	PVD			CVD			PVD				UNC	PCD	PVD		PVD					
	(2) Grade code	T9	M6	54	68	78	I5	R1	68	66	I5	L5	L6	L9	54	68	78	I5	10	D6	66	I5	M6					
(1) Geometry code	ISO Reference	PH5740	PH6103	PH6910	PH6920	PH6125	PH6740	PHM740	PH6920	PH6930	PH6740	PH5705	PH5320	PH5740	PH6910	PH6920	PH6125	PH6740	PH0910	PDP410	PH6930	PH6740	PH6103	iC	S	I	R	F
1111364	SPKW 08T308-E				◬											◬								8,50	3,97	-	-	-
1121227	SPKW 08T308-S				◬	○										◬								8,50	3,97	-	-	-
1111314	SPKT 08T308-E				◬				◬							◬								8,50	3,97	-	-	-

◬ First choice | Primeira opção | 1ª opción ◬ Stock item | Produto de stock | Itens de stock ○ Available under request (see page A-7) | Disponível sobre consulta (consulte a página A-7) | Disponible bajo consulta (mire pagina A-7)

Insert order code = (1) Geometry Code + (2) Grade Code

SPARE PARTS | Complementos | Repuestos

Order separately

Cutter ØDc	Insert Screw	Key (Torx)	Key (Torx - Nm)	Torque Value
			Nm	Nm
W06590 – 20 - 32	P0300800	XT09	DT0914	1,4
R06590 – 20 - 42	P0300800	XT09	DT0914	1,4

Note: The toolholder is supplied with the XT/PT key. To order the DT key please check the page A-243.
Check the procedures for the clamping screws on the page A-243.

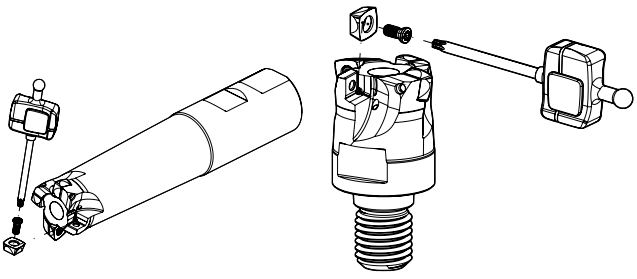

GRADES SELECTION GUIDE | Guia para selecção de graus | Tabla para selección de calidades

ISO	PSM	Material	HB (Brinell)	Grades ← Wear Resistance Toughness → PH6920	PH6125
P	1	Unalloyed Steel	125-220	✓	✓
	2	Low-Alloyed Steel	220-280	✓	✓
	3	High-Alloyed Steel	280-380	✓	✓
M	4	SS - Ferritic / Martensitic	200-330	✓	
	5	SS - Austenitic	200-330	✓	
	6	SS - Austenitic-ferritic (Duplex)	230-260	✓	
K	7	Malleable Cast Iron	130-230	✓	
	8	Grey Cast Iron	180-245	✓	
	9	Nodular Cast iron	160-250	✓	

Good Conditions
Average Conditions
Difficult Conditions

page A-236 page A -244

HIFEED 06590

RECOMMENDED CUTTING CONDITIONS | Condições de corte recomendadas | Condiciones de corte recomendables

ISO	PSM	Material	HB (Brinell)	Vc (m/min) ← Wear Resistance	Vc (m/min) Toughness →	Feed fz (mm/t)
				PH6920	PH6125	SP ... 08T308
P	1	Unalloyed Steel	125-220	150-230	160-190	0,30-1,50
	2	Low-Alloyed Steel	220-280	140-220	140-180	0,30-1,50
	3	High-Alloyed Steel	280-380	130-180	130-160	0,30-1,30
M	4	SS - Ferritic / Martensitic	200-330	120-160	-	0,30-1,40
	5	SS - Austenitic	200-330	100-150	-	0,30-1,40
	6	SS - Austenitic-ferritic (Duplex)	230-260	70-110	-	0,30-1,20
K	7	Malleable Cast Iron	130-230	150-280	-	0,30-1,50
	8	Grey Cast Iron	180-245	130-230	-	0,30-1,50
	9	Nodular Cast iron	160-250	80-190	-	0,30-1,40

(Note 1) Cutting conditions a_e/Dc=70%.

(Note 2) It's possible to occur vibrations in certain cases. Please reduce depth of cut and / or reduce cutting conditions in following cases:
- When using long shank;
- When using long tool overhang with arbor type;
- When application has poor clamping rigidity or when using a low rigidity machine.

(Note 3) PH5... and PHS... can be used wet or dry. PH7... use only air.

(Note 4) It's possible to occur vibrations in certain cases. Please reduce depth of cut and / or reduce cutting conditions in following cases:
- When using long shank;
- When using long tool overhang with arbor type;
- When application has poor clamping rigidity or when using a low rigidity machine.

CHIP-BREAKER SELECTION GUIDE | Guia para aplicações do quebra-aparas | Guía para aplicación del rompevirutas

ISO	PSM	Material	HB (Brinell)	Chip-Breaker Application	
				1st choise	Dificult Operations
P	1	Unalloyed Steel	125-220	SPKT 08...	SPKW 08...
	2	Low-Alloyed Steel	220-280	SPKW 08...	-
	3	High-Alloyed Steel	280-380	SPKW 08...	-
M	4	SS - Ferritic / Martensitic	200-330	SPKT 08...	-
	5	SS - Austenitic	200-330	SPKT 08...	-
	6	SS - Austenitic-ferritic (Duplex)	230-260	SPKW 08...	SPKW 08...
K	7	Malleable Cast Iron	130-230	SPKT 08...	SPKW 08...
	8	Grey Cast Iron	180-245	SPKW 08...	-
	9	Nodular Cast iron	160-250	SPKW 08...	-

PROGRAMMING DATA | Dados para programação | Datos para la programación

Insert	Programming Data			
	Rp	X	b	a_e
SP... 08T3...	1,9	0,7	5,6	6,6

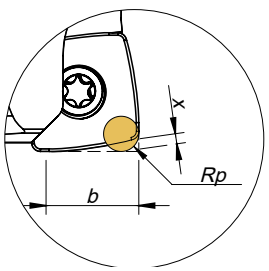

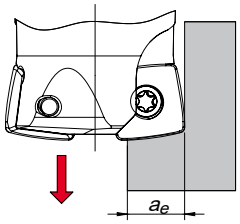

RAMPING AND HELICAL INTERPOLATION

Descida em rampa e interpolação helicoidal | Bajada en rampa e interpolación circular

Ramping

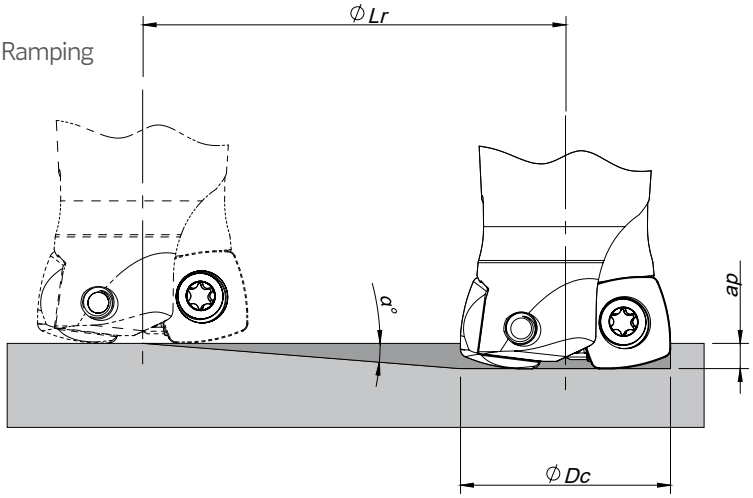

Helical Interpolation

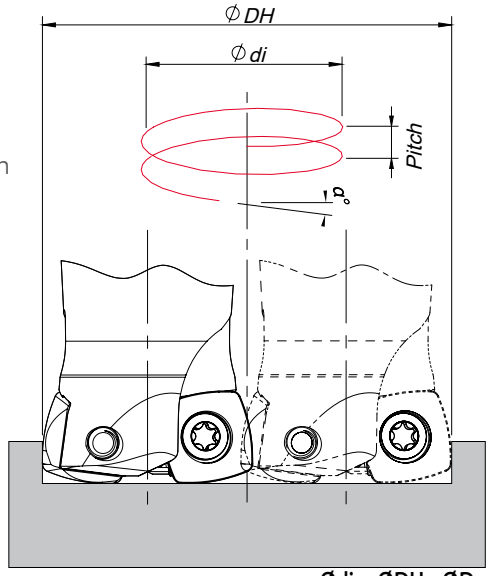

Ødi = ØDH - ØDc

ØDc	Ramping			Helical Interpolation		
	Max Ramp a°	Max a_p	Min Lr	ØDHmin	ØDHmax	Max Pitch/Rev.
20	0,5	1,2	137,5	27,8 -	- 38,0	0,2 0,5
25	1	1,2	68,7	37,8 -	- 48,0	0,7 1,2
32	1,4	1,2	49,1	51,8 -	- 62,0	1,5 2,3
35	1,1	1,2	62,5	57,8 -	- 68,0	1,3 2,0
42	0,9	1,2	76,4	71,8 -	- 82,0	1,4 1,9

Note: During helical interpolation do not exceed max Pitch.

PLUNGING | Mergulho | Plunge

L≤3Dc	L>3Dc	S max.
f_z (mm/t)		
0,08-0,15	0,05-0,10	$Smax = \sqrt{DC.Dr - Dr^2}$

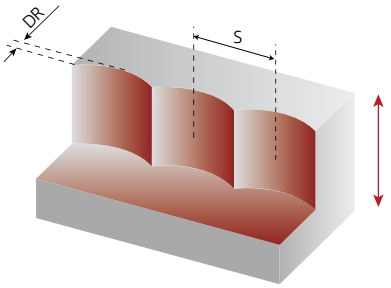

S max and DR corresponding cutting diameter Dc (mm)					
DR (mm)	Dc (mm)				
	20	25	32	35	42
1,0	4,4	4,9	5,6	5,8	6,4
2,0	6,0	6,8	7,7	8,1	8,9
3,0	7,1	8,1	9,3	9,8	10,8
4,0	8,0	9,2	10,6	11,1	12,3
5,0	8,7	10,0	11,6	12,2	13,6
6,0	9,2	10,7	12,5	13,2	14,7

Note: Recommended for L ≤ 4 Dc for extra long tool this step and side cut must be reduced.

page A-236
page A -244

PLUS 49090



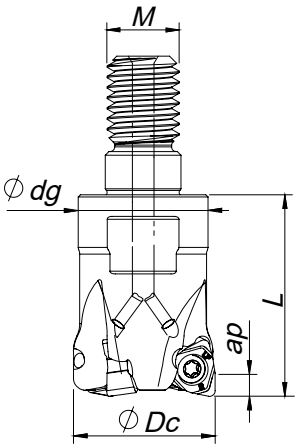

Threaded Coupling

K_r=90º | γ_p = -7º

Order code Código	Reference Referência Referencia		Dimensions | Dimensões | Dimensiones (mm)				Kg	Specification	Insert Pastilha Inserto	Stock
			ØDc	M	Ødg	L		Ap max (mm)		
181136000	016R49090-02-07-M08023	2	16	M08	13	23	0,023	3,00	WNHU 04T308-LP	ⓢ
181128300	020R49090-03-07-M10028	3	20	M10	18	28	0,052	3,00	WNHU 04T308-LP	ⓢ
181110900	025R49090-04-07-M12030	4	25	M12	21	30	0,078	3,00	WNHU 04T308-LP	ⓢ
181128400	032R49090-05-07-M16035	5	32	M16	29	35	0,150	3,00	WNHU 04T308-LP	ⓢ

ⓢ Stock item | Produto de stock | Itens de stock ◯ Available under request (see page A-6) | Disponível sobre consulta (consulte a página A-6) | Disponible bajo consulta (mire pagina A-6)



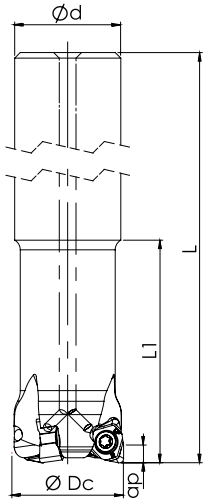

Cylindrical Shank

K_r=90º | γ_p = -7º

Order code Código	Reference Referência Referencia		Dimensions | Dimensões | Dimensiones (mm)				Kg	Specification	Insert Pastilha Inserto	Stock
			ØDc	Ød/M	L	L1		Ap max (mm)		
181136100	016E49090-02-07-U015150	2	16	15	150	32	0,185	3,00	WNHU 04T308-LP	ⓢ
181136200	020E49090-03-07-U019150	3	20	19	150	40	0,292	3,00	WNHU 04T308-LP	ⓢ
181136300	025E49090-04-07-U024150	4	25	24	150	50	0,471	3,00	WNHU 04T308-LP	ⓢ

ⓢ Stock item | Produto de stock | Itens de stock ◯ Available under request (see page A-6) | Disponível sobre consulta (consulte a página A-6) | Disponible bajo consulta (mire pagina A-6)

SPARE PARTS | Complementos | Repuestos

Order separately

Cutter ØDc	Insert Screw	Key (Torx)	Key (Torx - Nm)	Torque Value
			Nm	Nm
R49090 - 20-32	P0250704	XT08	DT0812	1,2
E49090 - 16-25	P0250704	XT08	DT0812	1,2

Note: The toolholder is supplied with the XT/PT key. To order the DT key please check the page A-243.
Check the procedures for the clamping screws on the page A-243.

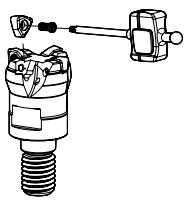

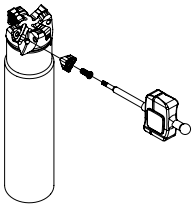

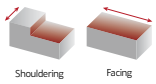

WNHU 04T308 | Inserts | Pastilhas | Plaquitas

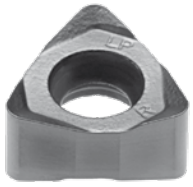

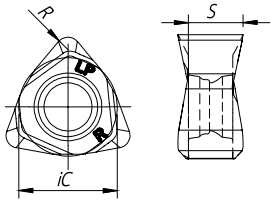

		P						M			K						N		S		H	Dimensions Dimensões Dimensiones (mm)				
		CVD	PVD					CVD	PVD		CVD		PVD				UNC	PCD	PVD		PVD					
	(2) Grade code	T9	M6	G1	G4	P3	G6	R1	G4	G6	L5	L9	G1	G4	P3	G6	10	D6	P3	G6	M6					
(1) Geometry code	ISO Reference	PHS740	PH6103	PH7910	PH7920	PH7930	PH7740	PHM740	PH7920	PH7740	PH5705	PH5740	PH7910	PH7920	PH7930	PH7740	PH0910	PDP410	PH7930	PH7740	PH6103	iC	S	I	R	F
1112277	WNHU 04T308 PNER-LP				●	●								●	●							6,35	3,50	-	0,80	-

● First choice | Primeira opção | 1ª opción ● Stock item | Produto de stock | Itens de stock ○ Available under request (see page A-7) | Disponível sobre consulta (consulte a página A-7) | Disponible bajo consulta (mire pagina A-7)

Insert order code = (1) Geometry Code + (2) Grade Code

GRADES SELECTION GUIDE | Guia para selecção de graus | Tabla para selección de calidades

ISO	PSM	Material	HB (Brinell)	Grades ← Wear Resistance — Toughness → PH7920	PH7930
P	1	Unalloyed Steel	125-220	✓	✓
	2	Low-Alloyed Steel	220-280	✓	✓
	3	High-Alloyed Steel	280-380	✓	✓
K	7	Malleable Cast Iron	130-230	✓	✓
	8	Grey Cast Iron	180-245	✓	✓
	9	Nodular Cast iron	160-250	✓	✓

Good Conditions
Average Conditions
Difficult Conditions

RECOMMENDED CUTTING CONDITIONS | Condições de corte recomendadas | Condiciones de corte recomendables

ISO	PSM	Material	HB (Brinell)	Vc (m/min) ← Wear Resistance — Toughness → PH7920	PH7930
P	1	Unalloyed Steel	125-220	160-250	140-230
	2	Low-Alloyed Steel	220-280	150-230	130-210
	3	High-Alloyed Steel	280-380	140-200	120-180
K	7	Malleable Cast Iron	130-230	170-290	150-270
	8	Grey Cast Iron	180-245	140-250	120-230
	9	Nodular Cast iron	160-250	90-220	70-200

Insert	Feed f_z (mm/t)		a_p Rec.
	Roughing	Finishing	
WNHU 04T308-LP	0.15-0.30	0.10-0.25	0.50-3.00

(Note 1) Cutting conditions should be adjusted according to the machine and work rigidity.
(Note 2) If chattering occurs, reduce a_p and V_c by 30% and keep the same f_z per tooth.

page A-236 page A -244

PLUS 17190



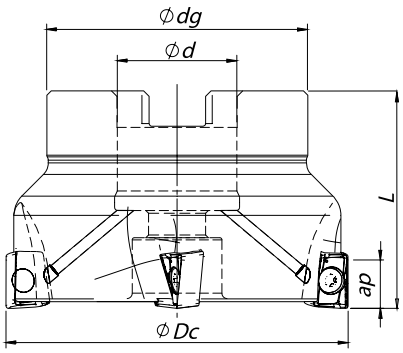

Arbor Mounting

$K_r = 90°$ | $\gamma_p = -7°$

Order code Código	Reference Referência Referencia		Dimensions | Dimensões | Dimensiones (mm)				Kg	Specifications		Insert Pastilha Inserto	Stock
			ØDc	Ød/M	ØDg	L		Arbor Type	Ap max (mm)		
181075300	040A17190-04-07-016040	4	40	16	32	40	0,21	A	9,00	ANHX 1004...	◈
181075400	040A17190-05-07-016040	5	40	16	32	40	0,21	A	9,00	ANHX 1004...	◈
181075500	050A17190-05-07-022040	5	50	22	42	40	0,35	A	9,00	ANHX 1004...	◈
181075600	050A17190-07-07-022040	7	50	22	42	40	0,34	A	9,00	ANHX 1004...	◈
181075700	063A17190-07-07-022040	7	63	22	52	40	0,55	A	9,00	ANHX 1004...	◈
181075800	063A17190-09-07-022040	9	63	22	52	40	0,54	A	9,00	ANHX 1004...	◈
181075900	080A17190-08-07-027050	8	80	27	60	50	1,00	B	9,00	ANHX 1004...	◈
181076000	080A17190-10-07-027050	10	80	27	60	50	1,00	B	9,00	ANHX 1004...	◈
181076100	100A17190-09-07-032050	9	100	32	80	50	1,80	B	9,00	ANHX 1004...	◈
181076200	100A17190-12-07-032050	12	100	32	80	50	1,80	B	9,00	ANHX 1004...	◈

◈ Stock item | Produto de stock | Itens de stock ○ Available under request (see page A-6) | Disponível sobre consulta (consulte a página A-6) | Disponible bajo consulta (mire pagina A-6)

ANHX 1004.. | Inserts | Pastilhas | Plaquitas

ANHX-LP



ANHX-LM



ANHX-LN



ANHX-LP | LM | LN

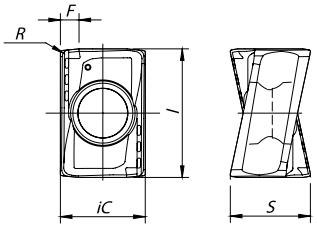

		P						M			K							N		S		H	Dimensions Dimensões Dimensiones (mm)				
		CVD	PVD					CVD	PVD		CVD			PVD				UNC	PCD	PVD		PVD					
	(2) Grade code	T9	P7	G1	G4	P3	G6	R1	P3	G6	L5	L6	L9	G1	G4	P3	G6	10	D6	P3	G6	P7					
(1) Geometry code	ISO Reference	PHS740	PH7603	PH7910	PH7920	PH7930	PH7740	PHM740	PH7930	PH7740	PH5705	PH5320	PH5740	PH7910	PH7920	PH7930	PH7740	PH0910	PDP410	PH7930	PH7740	PH7603	iC	S	l	R	F
1111652	ANHX 100405 PNR-LP			◈	◈	◈								◈	◈	◈							6,60	6,20	10,00	0,50	0,85
1112106	ANHX 100408 PNR-LP				◈	◈									◈	◈							6,60	6,20	10,00	0,80	0,60
1111908	ANHX 100412 PNR-LP				◈	◈									◈	◈							6,60	6,20	10,00	1,20	0,30
1112005	ANHX 100405 PNER-LM				◈	◈	◈		◈	◈					◈	◈	◈			◈	◈		6,60	6,20	10,00	0,50	0,85
1112162	ANHX 100408 PNER-LM				◈	◈			◈						◈	◈				◈			6,60	6,20	10,00	0,80	0,60
1112103	ANHX 100412 PNER-LM				◈	◈	◈		◈	◈					◈	◈	◈			◈	◈		6,60	6,20	10,00	1,20	0,30
1111997	ANHX 100405 PNFR-LN																	◈					6,60	6,20	10,00	0,50	0,85
1112102	ANHX 100412 PNR-LN																	◈					6,60	6,20	10,00	1,20	0,30

◈ First choice | Primeira opção | 1ª opción ◈ Stock item | Produto de stock | Itens de stock ○ Available under request (see page A-7) | Disponível sobre consulta (consulte a página A-7) | Disponible bajo consulta (mire pagina A-7)

Insert order code = (1) Geometry Code + (2) Grade Code

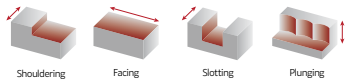



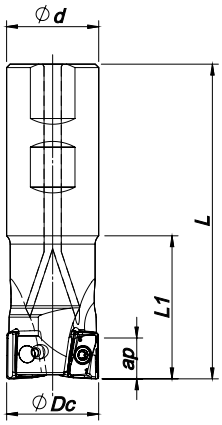

Weldon Shank

K_r = 90° | γ_p = -7° (-6°*)

Order code Código	Reference Referência Referencia		Dimensions | Dimensões | Dimensiones (mm)				Kg	Specifications	Insert Pastilha Inserto	Stock
			ØDc	Ød/M	L	L1		Ap max (mm)		
181075000	014W17190-01-06-016090*	1	14	16	90	23	0,188	9,00	ANHX 1004...	ⓢ
181101400	016W17190-02-06-016090*	2	16	16	90	25	0,123	9,00	ANHX 1004...	ⓢ
181096800	016W17190-02-06-016150*	2	16	16	150	25	0,190	9,00	ANHX 1004...	ⓢ
181075200	018W17190-02-06-016090*	2	18	16	90	23	0,125	9,00	ANHX 1004...	ⓢ
181071400	020W17190-02-06-020100*	2	20	20	100	30	0,210	9,00	ANHX 1004...	ⓢ
181071500	020W17190-03-06-020100*	3	20	20	100	30	0,206	9,00	ANHX 1004...	ⓢ
181074400	025W17190-02-06-025115*	2	25	25	115	35	0,391	9,00	ANHX 1004...	ⓢ
181074500	025W17190-03-06-025115*	3	25	25	115	35	0,387	9,00	ANHX 1004...	ⓢ
181074600	032W17190-03-06-032125*	3	32	32	125	40	0,701	9,00	ANHX 1004...	ⓢ
181074700	032W17190-04-06-032125*	4	32	32	125	40	0,698	9,00	ANHX 1004...	ⓢ
181074800	040W17190-04-07-032130	4	40	32	130	40	0,780	9,00	ANHX 1004...	ⓢ
181074900	040W17190-05-07-032130	5	40	32	130	40	0,777	9,00	ANHX 1004...	ⓢ

ⓢ Stock item | Produto de stock | Itens de stock

◯ Available under request (see page A-6) | Disponível sobre consulta (consulte a página A-6) | Disponible bajo consulta (mire pagina A-6)

SPARE PARTS | Complementos | Repuestos

Cutter ØDc	Insert Screw	Key (Torx)	Order separately Key (Torx - Nm)	Torque Value	Order separately Screw	DIN 6368 Wrench
W17190 – 14 - 40	P0300800	XT09	DT0914	1,4	-	-
A17190 – 40 - 63	P0300800	XT09	DT0914	1,4	-	-
A17190 – 80	P0300800	XT09	DT0914	1,4	J0123510	SD6368-12
A17190 – 100	P0300800	XT09	DT0914	1,4	J0164110	SD6368-16

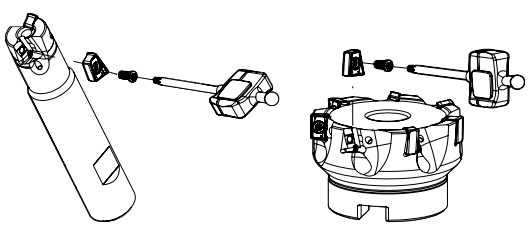

Note: The toolholder is supplied with the XT/PT key. To order the DT key please check the page A-243.
Check the procedures for the clamping screws on the page A-243.

page A-236
page A -244

PLUS 17190

GRADES SELECTION GUIDE | Guia para selecção de graus | Tabla para selección de calidades

ISO	PSM	Material	HB (Brinell)	Grades ← Wear Resistance				Toughness →
				PH0910	PH7910	PH7920	PH7930	PH7740
P	1	Unalloyed Steel	125-220		✓	✓	✓	✓
	2	Low-Alloyed Steel	220-280		✓	✓	✓	✓
	3	High-Alloyed Steel	280-380		✓	✓	✓	✓
M	4	SS - Ferritic / Martensitic	200-330				✓	✓
	5	SS - Austenitic	200-330				✓	✓
	6	SS - Austenitic-ferritic (Duplex)	230-260				✓	✓
K	7	Malleable Cast Iron	130-230			✓		✓
	8	Grey Cast Iron	180-245			✓		✓
	9	Nodular Cast iron	160-250		✓	✓		✓
N	10	Aluminium and Non Ferrous	30-130	✓				
S	11	Heat Resistant Super Alloys	200-320		✓		✓	✓

● Good Conditions
◐ Average Conditions
◔ Difficult Conditions

RECOMMENDED CUTTING CONDITIONS | Condições de corte recomendadas | Condiciones de corte recomendables

ISO	PSM	Material	HB (Brinell)	Vc (m/min) ← Wear Resistance				Toughness →	Feed fz (mm/t)		
				PH0910	PH7910	PH7920	PH7930	PH7740	ANHX... LP	ANHX... LM	ANHX... LN
P	1	Unalloyed Steel	125-220	-	190-280	180-250	160-220	140-170	0,10-0,20	0,08-0,20	-
	2	Low-Alloyed Steel	220-280	-	180-240	170-210	150-180	130-160	0,10-0,20	0,08-0,15	-
	3	High-Alloyed Steel	280-380	-	170-220	160-200	130-160	110-140	0,10-0,15	0,08-0,15	-
M	4	SS - Ferritic / Martensitic	200-330	-	-	-	120-200	90-140	-	0,08-0,20	-
	5	SS - Austenitic	200-330	-	-	-	100-190	80-120	-	0,08-0,15	-
	6	SS - Austenitic-ferritic (Duplex)	230-260	-	-	-	90-120	70-100	-	0,08-0,15	-
K	7	Malleable Cast Iron	130-230	-	180-320	170-300	160-280	130-250	0,10-0,25	0,08-0,20	-
	8	Grey Cast Iron	180-245	-	170-280	150-250	140-240	110-220	0,10-0,25	0,08-0,20	-
	9	Nodular Cast iron	160-250	-	100-240	90-210	90-200	80-170	0,10-0,20	0,08-0,15	-
N	10	Aluminium and Non Ferrous	30-130	350-1200	-	-	-	-	-	-	0,10-0,20
S	11	Heat Resistant Super Alloys	200-320	-	-	-	35-70	30-60	-	0,08-0,10	-

(Note 1) Cutting conditions $a_e/Dc=70\%$.

(Note 2)

Operation	a_e	Vc & fz	a_p (mm)
Slotting	100%	<20%	2,0-3,5
Shouldering	<50%	>8%	3,0-6,0
	≤25%	>12%	6,0-8,5

(Note 3)
It's possible to occur vibrations in certain cases. Please reduce depth of cut and / or reduce cutting conditions in following cases:
- When using long shank;
- When using long tool overhang with arbor type;
- When application has poor clamping rigidity or when using a low rigidity machine.

CHIP-BREAKER SELECTION GUIDE | Guia de selecção do quebra-aparas | Guía de selección del rompevirutas

ISO	PSM	Material	HB (Brinell)	Chip Breaker Application	
				1st choice	Difficult Operations
P	1	Unalloyed Steel	125-220	ANHX 10... LM	ANHX 10... LP
	2	Low-Alloyed Steel	220-280	ANHX 10... LM	ANHX 10... LP
	3	High-Alloyed Steel	280-380	ANHX 10... LM	ANHX 10... LP
M	4	SS - Ferritic / Martensitic	200-330	ANHX 10... LM	-
	5	SS - Austenitic	200-330	ANHX 10... LM	-
	6	SS - Austenitic-ferritic (Duplex)	220-260	ANHX 10... LM	-
K	7	Malleable Cast Iron	130-230	ANHX 10... LM	ANHX 10... LP
	8	Grey Cast Iron	180-245	ANHX 10... LM	ANHX 10... LP
	9	Nodular Cast iron	160-250	ANHX 10... LP	-
N	10	Aluminium and Non Ferrous	30-130	ANHX 10... LN	-
S	11	Heat Resistant Super Alloys	200-320	ANHX 10... LM	-

PLUNGING | Mergulho | Plunge

L≤3Dc	L>3Dc	S max.
f_z (mm/t)		
0,10-0,20	0,10-0,14	$Smax = \sqrt{DC.Dr - Dr^2}$

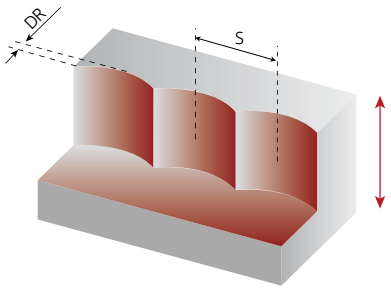

S max and DR corresponding cutting diameter Dc (mm)											
DR (mm)	Dc (mm)										
	14	16	18	20	25	32	40	50	63	80	100
1,0	3,6	3,9	4,1	4,4	4,9	5,6	6,2	7,0	7,9	8,9	9,9
2,0	4,9	5,3	5,7	6,0	6,8	7,7	8,7	9,8	11,0	12,5	14,0
3,0	5,7	6,2	6,7	7,1	8,1	9,3	10,5	11,9	13,4	15,2	17,1

page A-236
page A -244

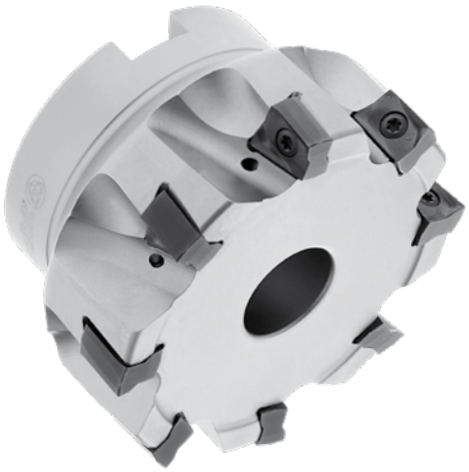

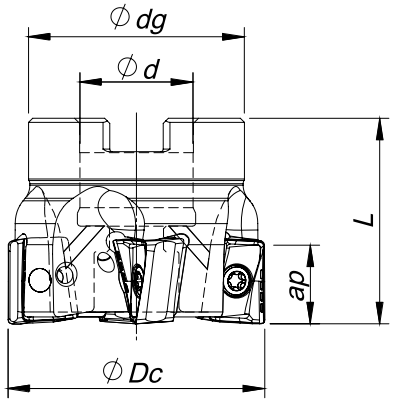

Arbor Mounting

$\kappa_r = 90°$ | $\gamma_p = -6°$

Order code Código	Reference Referência Referencia		Dimensions | Dimensões | Dimensiones (mm)				Kg	Specifications		Insert Pastilha Inserto	Stock
			ØDc	Ød/M	ØDg	L		Arbor Type	Ap max		
181116400	040A17590-04-06-016040	4	40	16	32	40	0,17	A	11,00	ANHX 1206...	◉
181114500	050A17590-05-06-022040	5	50	22	42	40	0,30	A	11,00	ANHX 1206...	◉
181115900	050A17590-06-06-022040	6	50	22	42	40	0,30	A	11,00	ANHX 1206...	◉
181116500	063A17590-05-06-022040	5	63	22	52	40	0,55	A	11,00	ANHX 1206...	◉
181116600	063A17590-07-06-022040	7	63	22	52	40	0,52	A	11,00	ANHX 1206...	◉
181116700	080A17590-08-06-027050	8	80	27	60	50	1,10	A	11,00	ANHX 1206...	◉
181116800	080A17590-10-06-027050	10	80	27	60	50	1,10	A	11,00	ANHX 1206...	○
181116900	100A17590-12-06-032050	12	100	32	80	50	1,65	B	11,00	ANHX 1206...	◉
181117000	125A17590-14-06-040063	14	125	40	90	63	3,16	B	11,00	ANHX 1206...	○

◉ Stock item | Produto de stock | Itens de stock

○ Available under request (see page A-6) | Disponível sobre consulta (consulte a página A-6) | Disponible bajo consulta (mire pagina A-6)



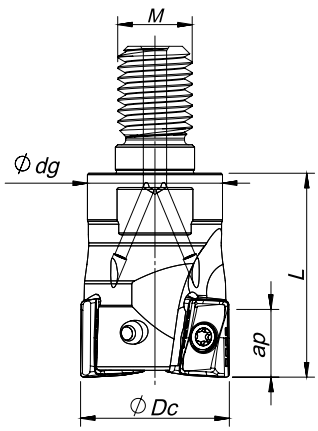

Threaded Coupling

$\kappa_r = 90°$ | $\gamma_p = -6°$

Order code Código	Reference Referência Referencia		Dimensions | Dimensões | Dimensiones (mm)				Kg	Specifications	Insert Pastilha Inserto	Stock
			ØDc	Ød/M	Ødg	L		Ap max		
181117100	025R17590-02-06-M12035	2	25	M12	21	35	0,09	11,00	ANHX 1206...	◉
181117200	032R17590-03-06-M16043	3	32	M16	29	43	0,20	11,00	ANHX 1206...	◉
181117300	042R17590-04-06-M16043	4	42	M16	29	43	0,26	11,00	ANHX 1206...	○

◉ Stock item | Produto de stock | Itens de stock

○ Available under request (see page A-6) | Disponível sobre consulta (consulte a página A-6) | Disponible bajo consulta (mire pagina A-6)

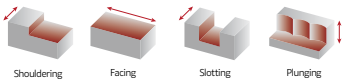



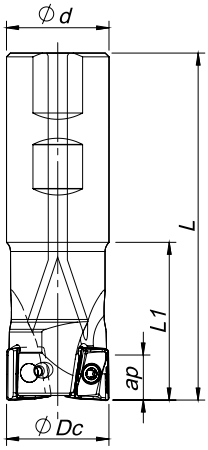

Weldon Shank

K_r = 90° | γ_p = -6°

Order code Código	Reference Referência Referencia		Dimensions | Dimensões | Dimensiones (mm)				Kg	Specifications	Insert Pastilha Inserto	Stock
			ØDc	Ød/M	L	L1		Ap max		
181116000	025W17590-02-06-025110	2	25	25	110	35	0,37	11,00	ANHX 1206...	◎
181120600	032W17590-03-06-032150	3	32	32	150	35	0,84	11,00	ANHX 1206...	◎
181116100	040W17590-04-06-032150	4	40	32	150	40	0,88	11,00	ANHX 1206...	◎

◎ Stock item | Produto de stock | Itens de stock

○ Available under request (see page A-6) | Disponível sobre consulta (consulte a página A-6) | Disponible bajo consulta (mire pagina A-6)



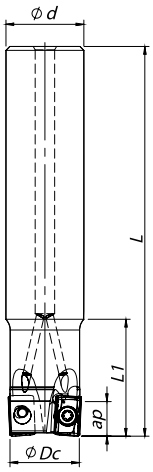

Cylindrical Shank

K_r = 90° | γ_p = -6°

Order code Código	Reference Referência Referencia		Dimensions | Dimensões | Dimensiones (mm)				Kg	Specifications	Insert Pastilha Inserto	Stock
			ØDc	Ød/M	L	L1		Ap max		
181116300	026E17590-02-06-025200	2	26	25	200	40	0,66	11,00	ANHX 1206...	◎
181116200	033E17590-03-06-032250	3	33	32	250	40	1,40	11,00	ANHX 1206...	◎

◎ Stock item | Produto de stock | Itens de stock

○ Available under request (see page A-6) | Disponível sobre consulta (consulte a página A-6) | Disponible bajo consulta (mire pagina A-6)

SPARE PARTS | Complementos | Repuestos

Order separately

Cutter ØDc	Insert Screw	Key (Torx)	Key (Torx - Nm)	Torque Value
				Nm
E17590 - 26 - 33	P0350904	XT10	DT1020	2,0
A17590 - 40 - 100	P0350904	XT10	DT1020	2,0
A17590 - 125	P0350904	PT10	DT1020	2,0
R17590 - 25 - 42	P0350904	XT10	DT1020	2,0
W17590 - 25-40	P0350904	XT10	DT1020	2,0

Note: The toolholder is supplied with the XT/PT key. To order the DT key please check the page A-243.
Check the procedures for the clamping screws on the page A-243.

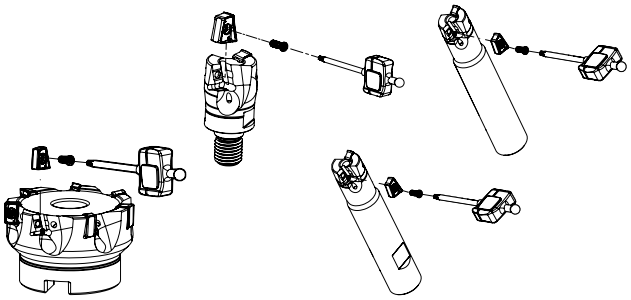

page A-236
page A -244

PLUS 17590

ANHX 1206.. | Inserts | Pastilhas | Plaquitas

ANHX-LS

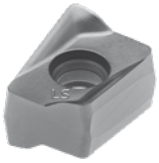

ANHX-MP (PHS grade) NEW



PHS NEW GRADE

ANHX-LS | MP

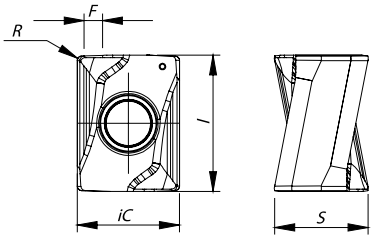

		P						M			K							N		S		H	Dimensions Dimensões Dimensiones (mm)				
		CVD	PVD					CVD	PVD		CVD			PVD				UNC	PCD	PVD		PVD					
	(2) Grade code	T9	P7	G1	G4	P3	G6	R1	P3	G6	L5	L6	L9	G1	G4	P3	G6	10	D6	P3	G6	P7					
(1) Geometry code	ISO Reference	PH5740	PH7603	PH7910	PH7920	PH7930	PH7740	PHM740	PH7930	PH7740	PH5705	PH5320	PH5740	PH7910	PH7920	PH7930	PH7740	PH0910	PDP410	PH7930	PH7740	PH7603	iC	S	l	R	F
1112474	ANHX 120604 PNER-LS				◎	◎	◎		◎	◎					◎		◎			◎	◎		9,0	8,3	12,0	0,4	1,6
1112237	ANHX 120608 PNER-LS				◎	◎	◎		◎	◎					◎		◎			◎	◎		9,0	8,3	12,0	0,8	1,2
1112429	ANHX 120616 PNER-LS				◎	◎	◎		◎	◎					◎		◎			◎	◎		9,0	8,3	12,0	1,6	0,4
1112473	ANHX 120604 PNSR-MP				◎		◎					◎			◎		◎						9,0	8,3	12,0	0,4	1,6
NEW 1112238	ANHX 120608 PNSR-MP	◎			◎		◎					◎			◎		◎						9,0	8,3	12,0	0,8	1,2
1112430	ANHX 120616 PNSR-MP				◎		◎					◎			◎		◎						9,0	8,3	12,0	1,6	0,4

◎ First choice | Primeira opção | 1ª opción ◎ Stock item | Produto de stock | Itens de stock ○ Available under request (see page A-7) | Disponível sobre consulta (consulte a página A-7) | Disponible bajo consulta (mire pagina A-7)

Insert order code = (1) Geometry Code + (2) Grade Code

RECOMMENDED CUTTING CONDITIONS | Condições de corte recomendadas | Condiciones de corte recomendables

ISO	PSM	Material	HB (Brinell)	Vc (m/min) ← Wear Resistance — Toughness →					Feed f_z (mm/t)	
				PH5320	PH7920	PH7930	PHS740	PH7740	ANHX 12... LS	ANHX 12... MP
P	1	Unalloyed Steel	125-220	-	150-230	150-180	130-160	130-160	0,10-0,20	0,10-0,30
	2	Low-Alloyed Steel	220-280	-	140-220	140-170	120-150	120-150	0,10-0,20	0,10-0,25
	3	High-Alloyed Steel	280-380	-	130-180	120-150	100-130	100-130	0,10-0,15	0,10-0,20
M	4	SS - Ferritic / Martensitic	200-330	-	-	90-150	-	100-120	0,10-0,20	-
	5	SS - Austenitic	200-330	-	-	80-130	-	80-110	0,10-0,15	-
	6	SS - Austenitic-ferritic (Duplex)	230-260	-	-	70-100	-	70-100	0,10-0,15	-
K	7	Malleable Cast Iron	130-230	170-300	150-280	-	-	130-250	0,10-0,25	0,10-0,30
	8	Grey Cast Iron	180-245	150-250	130-230	-	-	100-200	0,10-0,25	0,10-0,30
	9	Nodular Cast iron	160-250	90-210	80-190	-	-	50-150	0,10-0,20	0,10-0,25
S	11	Heat Resistant Super Alloys	200-320	-	-	25-100	-	20-80	0,07-0,10	-

(Note 1)
Cutting conditions a_e/Dc=70%.

(Note 2)

Operation	a_e	Vc & fz	a_p (mm)
Slotting	100%	<20%	2.5-4.0
Shouldering	<50%	>8%	4,0-7,0
	≤25%	>12%	7,0-10,0

(Note 3)
It's possible to occur vibrations in certain cases. Please reduce depth of cut and / or reduce cutting conditions in following cases:
- When using long shank;
- When using long tool overhang with arbor type;
- When application has poor clamping rigidity or when using a low rigidity machine.

GRADES SELECTION GUIDE | Guia para selecção de graus | Tabla para selección de calidades

ISO	PSM	Material	HB (Brinell)	Grades ← Wear Resistance — Toughness → PH5320	PH7920	PH7930	PHS740	PH7740
P	1	Unalloyed Steel	125-220		✓	✓	✓	✓
	2	Low-Alloyed Steel	220-280		✓	✓	✓	✓
	3	High-Alloyed Steel	280-380		✓	✓	✓	✓
M	4	SS - Ferritic / Martensitic	200-330			✓		✓
	5	SS - Austenitic	200-330			✓		✓
	6	SS - Austenitic-ferritic (Duplex)	230-260			✓		✓
K	7	Malleable Cast Iron	130-230	✓	✓			✓
	8	Grey Cast Iron	180-245	✓	✓			✓
	9	Nodular Cast iron	160-250	✓	✓			✓
S	11	Heat Resistant Super Alloys	200-320			✓		✓

Good Conditions
Average Conditions
Difficult Conditions

CHIP-BREAKER SELECTION GUIDE | Guia de selecção do quebra-aparas | Guía de selección del rompevirutas

ISO	PSM	Material	HB (Brinell)	Chip Breaker Application 1st choice	Difficult Operations
P	1	Unalloyed Steel	125-220	ANHX 12... LS	ANHX 12... MP
	2	Low-Alloyed Steel	220-280	ANHX 12... MP	-
	3	High-Alloyed Steel	280-380	ANHX 12... MP	-
M	4	SS - Ferritic / Martensitic	200-330	ANHX 12... LS	-
	5	SS - Austenitic	200-330	ANHX 12... LS	-
	6	SS - Austenitic-ferritic (Duplex)	220-260	ANHX 12... LS	-
K	7	Malleable Cast Iron	130-230	ANHX 12... LS	ANHX 12... MP
	8	Grey Cast Iron	180-245	ANHX 12... MP	-
	9	Nodular Cast iron	160-250	ANHX 12... MP	-
S	11	Heat Resistant Super Alloys	200-320	ANHX 12... LS	-

PLUNGING | Mergulho | Plunge

L≤3Dc	L>3Dc	S max.
f_z (mm/t)		
0,10-0,20	0,10-0,14	$Smax = \sqrt{DC.Dr - Dr^2}$

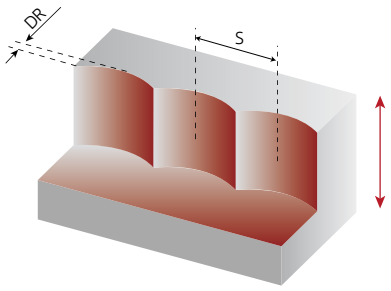

S max and DR corresponding cutting diameter Dc (mm)							
DR (mm)	Dc (mm)						
	32	40	50	63	80	100	125
1,0	5,6	6,2	7,0	7,9	8,9	9,9	11,1
2,0	7,7	8,7	9,8	11,0	12,5	14,0	15,7
3,0	9,3	10,5	11,9	13,4	15,2	17,1	19,1

page A-236
page A -244

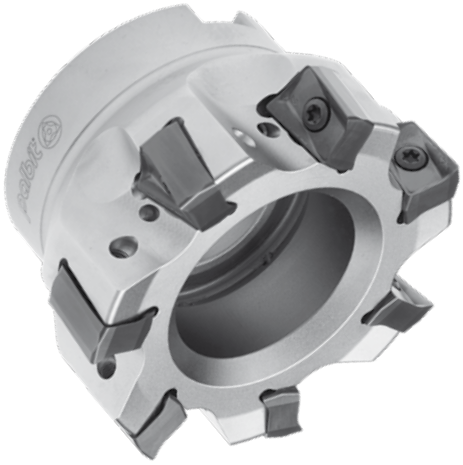

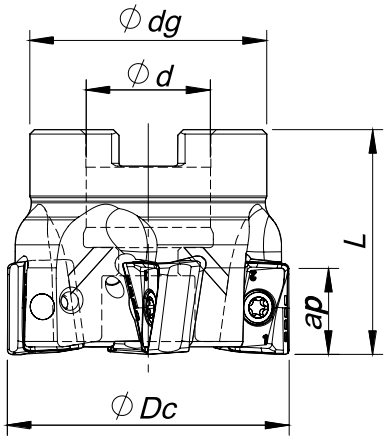

Arbor Mounting

$\kappa_r = 90°$ | $\gamma_p = -4°$

Order code Código	Reference Referência Referencia		Dimensions | Dimensões | Dimensiones (mm)				Kg	Specifications		Insert Pastilha Inserto	Stock
			ØDc	Ød/M	ØDg	L		Arbor Type	Ap max		
181067600	050A18190-03-04-022040	3	50	22	42	40	0,28	A	15,0	ANHX 1607...	◈
181067700	050A18190-04-04-022040	4	50	22	42	40	0,27	A	15,0	ANHX 1607...	◈
181067800	063A18190-04-04-022040	4	63	22	52	40	0,51	A	15,0	ANHX 1607...	◈
181067900	063A18190-06-04-022040	6	63	22	52	40	0,48	A	15,0	ANHX 1607...	◈
181068000	080A18190-05-04-027050	5	80	27	60	50	0,88	B	15,0	ANHX 1607...	◈
181051800	080A18190-07-04-027050	7	80	27	60	50	0,36	B	15,0	ANHX 1607...	◈
181068100	100A18190-05-04-032050	5	100	32	80	50	1,60	B	15,0	ANHX 1607...	◈
181068200	100A18190-08-04-032050	8	100	32	80	50	1,59	B	15,0	ANHX 1607...	◈
181068300	125A18190-07-04-040063	7	125	40	90	63	2,93	B	15,0	ANHX 1607...	◈
181068400	125A18190-10-04-040063	10	125	40	90	63	2,89	B	15,0	ANHX 1607...	◈
181068500	160A18190-08-04-U040063	8	160	40	110	63	4,29	C	15,0	ANHX 1607...	◈
181068600	160A18190-12-04-U040063	12	160	40	110	63	4,29	C	15,0	ANHX 1607...	◈

◈ Stock item | Produto de stock | Itens de stock ◯ Available under request (see page A-6) | Disponível sobre consulta (consulte a página A-6) | Disponible bajo consulta (mire pagina A-6)



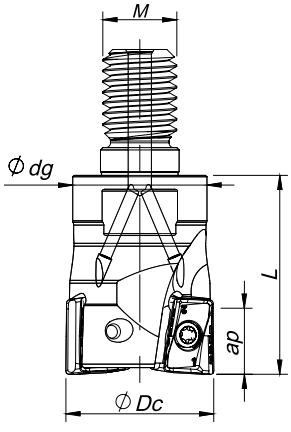

Threaded Coupling

$\kappa_r = 90°$ | $\gamma_p = -4°$

Order code Código	Reference Referência Referencia		Dimensions | Dimensões | Dimensiones (mm)				Kg	Specifications	Insert Pastilha Inserto	Stock
			ØDc	Ød/M	Ødg	L		Ap max		
181082800	032R18190-02-04-M16043	2	32	M16	29	43	0,20	15,0	ANHX 1607...	◈
181082900	040R18190-03-04-M16043	3	40	M16	29	43	0,24	15,0	ANHX 1607...	◈

◈ Stock item | Produto de stock | Itens de stock ◯ Available under request (see page A-6) | Disponível sobre consulta (consulte a página A-6) | Disponible bajo consulta (mire pagina A-6)

Shouldering | Facing | Slotting | Plunging



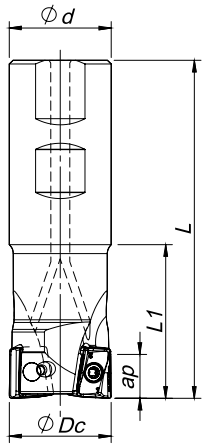

Weldon Shank

$K_r = 90°$ | $\gamma_p = -4°$

Order code Código	Reference Referência Referencia		Dimensions | Dimensões | Dimensiones (mm)				Kg	Specifications	Insert Pastilha Inserto	Stock
			ØDc	Ød/M	L	L1		Ap max		
181051600	032W18190-02-04-032110	2	32	32	110	50	0,66	15,0	ANHX 1607...	◈
181067500	040W18190-03-04-032115	3	40	32	115	40	0,66	15,0	ANHX 1607...	◈

◈ Stock item | Produto de stock | Itens de stock

◯ Available under request (see page A-6) | Disponível sobre consulta (consulte a página A-6) | Disponible bajo consulta (mire pagina A-6)

ANHX 1607... | Inserts | Pastilhas | Plaquitas

ANHX-LP

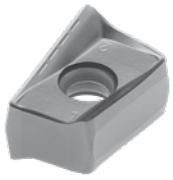

ANHX-MP (PHS grade) NEW



ANHX-LN



PHS NEW GRADE

ANHX-LP | MP | LN

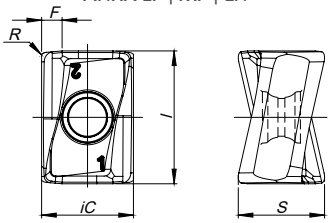

		P						M			K							N		S		H	Dimensions Dimensões Dimensiones (mm)				
		CVD	PVD					CVD	PVD		CVD			PVD				UNC	PCD	PVD		PVD					
	(2) Grade code	T9	P7	G1	G4	P3	G6	R1	P3	G6	L5	L6	L9	G1	G4	P3	G6	10	D6	P3	G6	P7					
(1) Geometry code	ISO Reference	PHS740	PH7603	PH7910	PH7920	PH7930	PH7740	PHM740	PH7930	PH7740	PH5705	PH5320	PH5740	PH7910	PH7920	PH7930	PH7740	PH0910	PDP410	PH7930	PH7740	PH7603	iC	S	l	R	F
1111519	ANHX 160708 PNR-LP			◈	◈	◈								◈	◈	◈							11,20	10,80	16	0,8	1,4
1111596	ANHX 160712 PNR-LP			◯	◈	◈								◯	◈	◈							11,20	10,50	16	1,2	1,2
NEW 1111595	ANHX 160708 PNER-MP	◈		◈	◈	◈								◈	◈	◈							11,20	10,80	16	0,8	1,4
1111598	ANHX 160712 PNER-MP			◈	◈	◈								◈	◈	◈							11,20	10,50	16	1,2	1,2
NEW 1112383	ANHX 160716 PNER-MP			◯	◯	◯								◯	◯	◯							11,20	10,80	16	1,6	0,9
1111659	ANHX 160708 PNFR-LN																	◈					11,20	10,80	16	0,8	1,4
1111597	ANHX 160712 PNFR-LN																	◈					11,20	10,50	16	1,2	1,2

◈ First choice | Primeira opção | 1ª opción ◈ Stock item | Produto de stock | Itens de stock ◯ Available under request (see page A-7) | Disponível sobre consulta (consulte a página A-7) | Disponible bajo consulta (mire pagina A-7)

Insert order code = (1) Geometry Code + (2) Grade Code

page A-236 page A -244

PLUS 18190

SPARE PARTS | Complementos | Repuestos

Cutter ØDc	Insert Screw	Key (Torx)	Key (Torx - Nm) (Order separately)	Torque Value	Screw (Order separately)	DIN 6368 Wrench
W18190 – 32 - 40	P0401200	XT15	DT1530	3,0	-	-
R18190 – 32 - 40	P0401200	XT15	DT1530	3,0	-	-
A18190 – 50 - 63	P0401200	XT15	DT1530	3,0	-	-
A18190 – 80	P0401200	XT15	DT1530	3,0	J0123510	SD6368-12
A18190 – 100	P0401200	XT15	DT1530	3,0	J0164110	SD6368-16
A18190 – 125	P0401200	PT15	DT1530	3,0	J0204610	SD6368-20
A18190 – 160	P0401200	PT15	DT1530	3,0	-	-

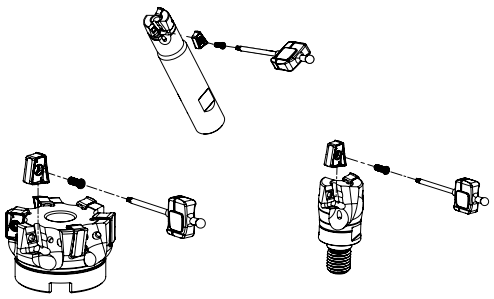

Note: The toolholder is supplied with the XT/PT key. To order the DT key please check the page A-243.
Check the procedures for the clamping screws on the page A-243.

RECOMMENDED CUTTING CONDITIONS | Condições de corte recomendadas | Condiciones de corte recomendas

ISO	PSM	Material	HB (Brinell)	Vc (m/min) ← Wear Resistance — Toughness →					Feed f_z (mm/t)		
				PH0910	PH7910	PH7920	PH7930	PHS740	ANHX 16... LP	ANHX 16... MP	ANHX 16... LN
P	1	Unalloyed Steel	125-220	-	190-280	180-250	160-220	140-200	0,10-0,22	0,08-0,25	-
	2	Low-Alloyed Steel	220-280	-	180-240	170-210	150-180	130-160	0,10-0,22	0,08-0,25	-
	3	High-Alloyed Steel	280-380	-	170-220	160-200	130-160	110-140	0,10-0,20	0,08-0,22	-
K	7	Malleable Cast Iron	130-230	-	180-320	170-300	160-280	-	0,10-0,25	0,08-0,25	-
	8	Grey Cast Iron	180-245	-	170-280	150-250	140-240	-	0,10-0,25	0,08-0,25	-
	9	Nodular Cast iron	160-250	-	100-240	90-210	90-200	-	0,10-0,20	0,08-0,22	-
N	10	Aluminium and Non Ferrous	30-130	300-1200	-	-	-	-	-	-	0,10-0,40

(Note 1)
Cutting conditions a_e/Dc=70%.

(Note 2)

Operation	a_e	Vc & fz	a_p (mm)
Slotting	100%	<20%	2,0-4,5
Shouldering	<50%	>8%	6,0-8,0
	≤25%	>12%	8,0-15,0

(Note 3)
It's possible to occur vibrations in certain cases. Please reduce depth of cut and / or reduce cutting conditions in following cases:
- When using long shank;
- When using long tool overhang with arbor type;
- When application has poor clamping rigidity or when using a low rigidity machine.

GRADES SELECTION GUIDE | Guia para selecção de graus | Guía para selección de calidades

ISO	PSM	Material	HB (Brinell)	Grades ← Wear Resistance — Toughness →				
				PH0910	PH7910	PH7920	PH7930	PHS740
P	1	Unalloyed Steel	125-220		✓	✓	✓	✓
P	2	Low-Alloyed Steel	220-280		✓	✓	✓	✓
P	3	High-Alloyed Steel	280-380		✓	✓	✓	✓
K	7	Malleable Cast Iron	130-230		✓	✓	✓	
K	8	Grey Cast Iron	180-245		✓	✓	✓	
K	9	Nodular Cast iron	160-250		✓	✓	✓	
N	10	Aluminium and Non Ferrous	30-130	✓				

Good Conditions
Average Conditions
Difficult Conditions

CHIP-BREAKER SELECTION GUIDE | Guia para aplicações do quebra-aparas | Guía para aplicación del rompevirutas

ISO	PSM	Material	HB (Brinell)	Chip Breaker Application	
				1st choice	Difficult Operations
P	1	Unalloyed Steel	125-220	ANHX 16... LP	ANHX 16... MP
P	2	Low-Alloyed Steel	220-280	ANHX 16... LP	ANHX 16... MP
P	3	High-Alloyed Steel	280-380	ANHX 16... LP	ANHX 16... MP
K	7	Malleable Cast Iron	130-230	ANHX 16... LP	ANHX 16... MP
K	8	Grey Cast Iron	180-245	ANHX 16... LP	ANHX 16... MP
K	9	Nodular Cast iron	160-250	ANHX 16... LP	ANHX 16... MP
N	10	Aluminium and Non Ferrous	30-130	ANHX 16... LN	-

PLUNGING | Mergulho | Plunge

L≤3Dc	L>3Dc	S max.
f_z (mm/t)		
0,10-0,20	0,10-0,14	$S_{max} = \sqrt{DC.DR - DR^2}$

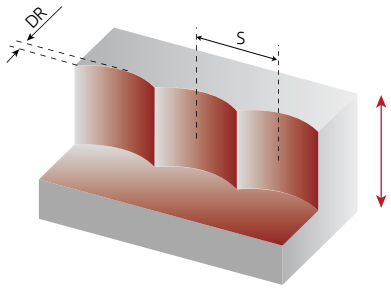

S max and DR corresponding cutting diameter Dc (mm)								
DR (mm)	Dc (mm)							
	32	40	50	63	80	100	125	160
1,0	5,6	6,2	7,0	7,9	8,9	9,9	11,1	12,6
2,0	7,7	8,7	9,8	11,0	12,5	14,0	15,7	17,8
3,0	9,3	10,5	11,9	13,4	15,2	17,1	19,1	21,7
4,0	10,6	12,0	13,6	15,4	17,4	19,6	22,0	25,0
5,0	11,6	13,2	15,0	17,0	19,4	21,8	24,5	27,8

page A-236
page A -244

LINEPRO 20090



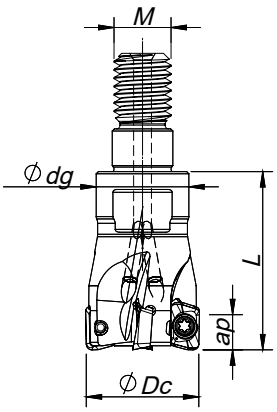

Threaded Coupling

K_r=90° | γ_p=+4°

Order code Código	Reference Referência Referencia		Dimensions | Dimensões | Dimensiones (mm)				Kg	Max ap (mm)			Insert Pastilha Inserto	Stock
			ØDc	Ød/M	Ødg	L		LP|LN	HF	MH		
181120400	010R20090-02-04-M06020	2	10	M6	9,8	20	0,01	4,00	0,30	2,00	XP... 0602...	◈
181112800	011R20090-02-04-M06020	2	11	M6	9,8	20	0,01	4,00	0,30	2,00	XP... 0602...	◈
181120500	012R20090-03-04-M06020	3	12	M6	9,8	20	0,02	4,00	0,30	2,00	XP... 0602...	◈
181112900	013R20090-03-04-M06020	3	12	M6	9,8	20	0,02	4,00	0,30	2,00	XP... 0602...	◈
181087500	016R20090-04-04-M08025	4	16	M8	13,0	25	0,03	4,00	0,30	2,00	XP... 0602...	◈
181113000	017R20090-04-04-M08025	4	17	M8	13,0	25	0,04	4,00	0,30	2,00	XP... 0602...	◈
181087600	020R20090-05-04-M10030	5	20	M10	18,0	30	0,06	4,00	0,30	2,00	XP... 0602...	◈
181087700	025R20090-07-04-M12030	7	25	M12	21,0	30	0,09	4,00	0,30	2,00	XP... 0602...	◈
181087800	032R20090-08-04-M16035	8	32	M16	29,0	35	0,19	4,00	0,30	2,00	XP... 0602...	◈

◈ Stock item | Produto de stock | Itens de stock

○ Available under request (see page A-6) | Disponível sobre consulta (consulte a página A-6) | Disponible bajo consulta (mire pagina A-6)



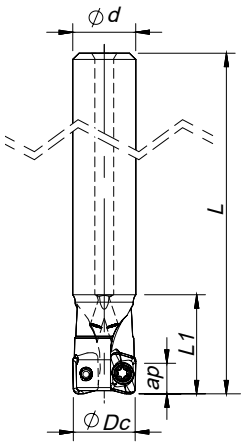

Cylindrical Shank

K_r=90° | γ_p=+4°

Order code Código	Reference Referência Referencia		Dimensions | Dimensões | Dimensiones (mm)				Kg	Max ap (mm)			Insert Pastilha Inserto	Stock
			ØDc	Ød/M	L	L1		LP|LN	HF	MH		
181087100	010E20090-02-04-010055	2	10	10	55	16	0,03	4,00	0,30	2,00	XP... 0602...	◈
181108300	010E20090-02-04-010100	2	10	10	100	25	0,03	4,00	0,30	2,00	XP... 0602...	◈
181087200	012E20090-02-04-012080	2	12	12	80	17	0,06	4,00	0,30	2,00	XP... 0602...	◈
181109900	012E20090-03-04-012120	3	12	12	120	30	0,06	4,00	0,30	2,00	XP... 0602...	◈
181087300	016E20090-03-04-016090	3	16	16	90	20	0,12	4,00	0,30	2,00	XP... 0602...	◈
181087400	016E20090-04-04-016090	4	16	16	90	20	0,11	4,00	0,30	2,00	XP... 0602...	◈
181097100	017E20090-05-04-016090	5	17	16	90	35	0,11	4,00	0,30	2,00	XP... 0602...	◈
181097200	021E20090-05-04-020090	5	21	20	90	35	0,13	4,00	0,30	2,00	XP... 0602...	◈

◈ Stock item | Produto de stock | Itens de stock

○ Available under request (see page A-6) | Disponível sobre consulta (consulte a página A-6) | Disponible bajo consulta (mire pagina A-6)



XP... 0602... | Inserts | Pastilhas | Plaquitas

XPET-LP



XPET-LN NEW



XPET-LP | LN

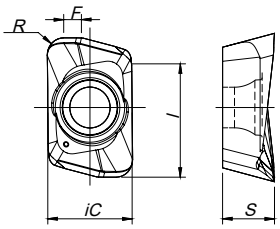

XPET-HF
(HiFeed geometry)



XPET-HF

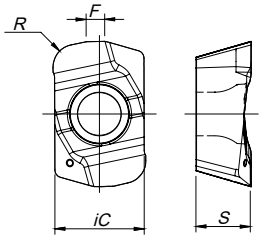

XPHW-MH NEW
(finishing geometry)

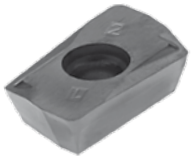

XPHW-MH

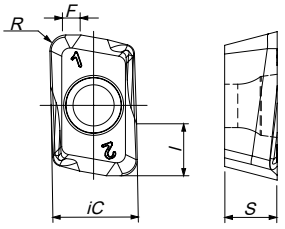

		P						M			K					N		S		H			Dimensions Dimensões Dimensiones (mm)				
		CVD	PVD					CVD	PVD		CVD	PVD				UNC	PCD	PVD		PVD	PCBN						
	(2) Grade code	T9	P7	G1	G4	P3	G6	R1	G4	P3	L9	G1	G4	P3	G6	10	D6	P3	G6	P7	S6	D4					
	(1) Geometry code / ISO Reference	PHS740	PH7603	PH7910	PH7920	PH7930	PH7740	PHM740	PH7920	PH7930	PH5740	PH7910	PH7920	PH7930	PH7740	PH0910	PDP410	PH7930	PH7740	PH7603	PBL603	PBH910	iC	S	l	R	F
	1112002 XPET 060204 PDER-LP				◬	◬				◬			◬	◬				◬					3,90	2,40	5,30	0,40	0,80
	1112003 XPET 060208 PDER-LP				◬	◬				◬			◬	◬				◬					3,90	2,40	5,30	0,80	0,70
	1112004 XPET 060216 PDER-LP				◬	◬				◬			◬	◬				◬					3,90	2,40	5,30	1,60	0,60
NEW	1112579 XPET 060202 PDFR-LN															◬							3,90	2,40	5,10	0,20	0,95
NEW	1112580 XPET 060204 PDFR-LN															◬							3,90	2,40	5,10	0,40	0,80
NEW	1112581 XPET 060208 PDFR-LN															◯							3,90	2,40	5,40	0,80	0,90
NEW	1112716 XPET 060212 PDFR-LN															◯							3,90	2,40	5,40	1.20	0,60
	1112049 XPET 060210 ZER-HF				◬	◬				◬			◬	◬				◬					3,90	2,40	-	1,00	0,80
NEW	1112562 XPHW 060205 ZER-MH		◯	◯																◯			3,90	2,40	2,40	0,50	1,00
NEW	1112259 XPHW 060208 ZER-MH		◬	◬																◬			3,90	2,40	2,40	0,80	0,70
NEW	1112563 XPHW 060210 ZER-MH		◯	◯																◯			3,90	2,40	2,40	1,00	0,50

◬ First choice | Primeira opção | 1ª opción ◬ Stock item | Produto de stock | Itens de stock ◯ Available under request (see page A-7) | Disponível sobre consulta (consulte a página A-7) | Disponible bajo consulta (mire pagina A-7)

Insert order code = (1) Geometry Code + (2) Grade Code

page A-236 page A -244

LINEPRO 20090

SPARE PARTS | Complementos | Repuestos

Order separately

Cutter ØDc	Insert Screw	Key (Torx)	Key (Torx - Nm)	Torque Value
E20090 - 10	P0180300	XT06IP	DT0606IP	0,6
E20090 - 12-16	P0180400	XT06IP	DT0606IP	0,6
R20090 - 12-16	P0180400	XT06IP	DT0606IP	0,6

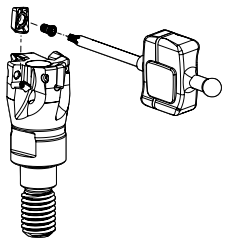

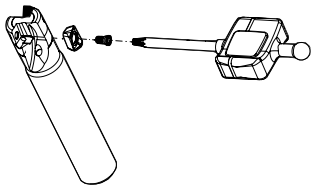

Note: The toolholder is supplied with the XT/PT key. To order the DT key please check the page A-243.
Check the procedures for the clamping screws on the page A-243.

RECOMMENDED CUTTING CONDITIONS | Condições de corte recomendadas | Condiciones de corte recomendables

ISO	PSM	Material	HB (Brinell)	Vc (m/min) ← Wear Resistance				Toughness →
				PH7603	PH0910	PH7910	PH7920	PH7930
P	1	Unalloyed Steel	125-220	220-280	-	200-260	180-240	160-220
	2	Low-Alloyed Steel	220-280	210-290	-	190-270	170-250	150-230
	3	High-Alloyed Steel	280-380	200-240	-	180-230	160-210	140-190
M	4	SS - Ferritic / Martensitic	200-330	-	-	-	-	130-220
	5	SS - Austenitic	200-330	-	-	-	-	120-180
	6	SS - Austenitic-ferritic (Duplex)	230-260	-	-	-	-	70-140
K	7	Malleable Cast Iron	130-230	-	-	-	160-350	160-350
	8	Grey Cast Iron	180-245	-	-	-	150-320	150-300
	9	Nodular Cast iron	160-250	-	-	-	130-280	120-260
N	10	Aluminium and Non Ferrous	30-130	-	350-1400	-	-	-
S	11	Heat Resistant Super Alloys	200-320	-	-	-	-	35-65
H	12	Hardened Steels	40-55 HRC	120-260	-	-	-	-

(Note 1) Cutting conditions $a_e/Dc=70\%$.

(Note 2) It's possible to occur vibrations in certain cases. Please reduce depth of cut and / or reduce cutting conditions in following cases:
- When using long shank;
- When using long tool overhang with arbor type;
- When application has poor clamping rigidity or when using a low rigidity machine.

(Note 3) PH5... and PHS... can be used wet or dry. PH7... use only air.

(Note 4) It's possible to occur vibrations in certain cases. Please reduce depth of cut and / or reduce cutting conditions in following cases:
- When using long shank;
- When using long tool overhang with arbor type;
- When application has poor clamping rigidity or when using a low rigidity machine.

Operation	a_e	Vc & fz	a_p (mm)
Slotting	100%	<20%	1,0-3,0
Shouldering	<50%	>8%	1,0-4,0
	≤25%	>12%	1,0-4,0

GRADES SELECTION GUIDE | Guia para selecção de graus | Tabla para selección de calidades

ISO	PSM	Material	HB (Brinell)	Grades ◄— Wear Resistance — Toughness —► PH7603	PH0910	PH7910	PH7920	PH7930
P	1	Unalloyed Steel	125-220	✓		✓	✓	✓
	2	Low-Alloyed Steel	220-280	✓		✓	✓	✓
	3	High-Alloyed Steel	280-380	✓		✓	✓	✓
M	4	SS - Ferritic / Martensitic	200-330					✓
	5	SS - Austenitic	200-330					✓
	6	SS - Austenitic-ferritic (Duplex)	230-260					✓
K	7	Malleable Cast Iron	130-230				✓	✓
	8	Grey Cast Iron	180-245				✓	✓
	9	Nodular Cast iron	160-250				✓	✓
N	10	Aluminium and Non Ferrous	30-130		✓			
S	11	Heat Resistant Super Alloys	200-320					✓
H	12	Hardened Steels	40-55 HRC	✓				

Good Conditions
Average Conditions
Difficult Conditions

Feed fz (mm/t)			
XPET 06...LP	XPET 06...LN	XPET 06...HF	XPHW 06...MH
0,05-0,07	-	0,40-0,8	0,05-0,12
0,05-0,07	-	0,40-0,8	0,05-0,12
0,05-0,07	-	0,40-0,6	0,05-0,12
0,05-0,07	-	0,40-0,8	-
0,05-0,07	-	0,40-0,6	-
0,05-0,07	-	0,40-0,6	-
0,05-0,07	-	0,50-0,8	-
0,05-0,07	-	0,50-0,8	-
0,05-0,07	-	0,50-0,8	-
-	0,05-0,07	-	-
0,05-0,07	-	0,40-0,6	-
-	-	-	0,03-0,10

page A-236
page A -244

LINEPRO 20090

CHIP-BREAKER SELECTION GUIDE | Guia para aplicações do quebra-aparas | Guía para aplicación del rompevirutas

ISO	PSM	Material	HB (Brinell)	Chip-Breaker Application	
				1st choise	Dificult Operations
P	1	Unalloyed Steel	125-220	XPET 06... LP	-
	2	Low-Alloyed Steel	220-280	XPET 06... LP	-
	3	High-Alloyed Steel	280-380	XPET 06... LP	-
M	4	SS - Ferritic / Martensitic	200-330	XPET 06... LP	-
	5	SS - Austenitic	200-330	XPET 06... LP	-
	6	SS - Austenitic-ferritic (Duplex)	230-260	XPET 06... LP	-
K	7	Malleable Cast Iron	130-230	XPET 06... LP	-
	8	Grey Cast Iron	180-245	XPET 06... LP	-
	9	Nodular Cast iron	160-250	XPET 06... LP	-
N	10	Aluminium and Non Ferrous	30-130	XPET 06... LN	-
S	11	Heat Resistant Super Alloys	200-320	XPET 06... LP	-
H	12	Hardened Steels	40-55 HRC	XPHW 06... MH	-

PROGRAMMING DATA | Dados para programação | Datos para la programación

Insert	Programming Data		
	Rp	X	b
XPET 06 HF	1,1	0,84	2,3

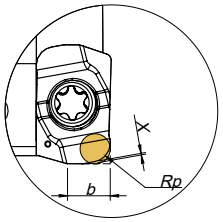

RAMPING AND HELICAL INTERPOLATION

Descida em rampa e interpolação helicoidal | Bajada en rampa e interpolación circular

Ramping

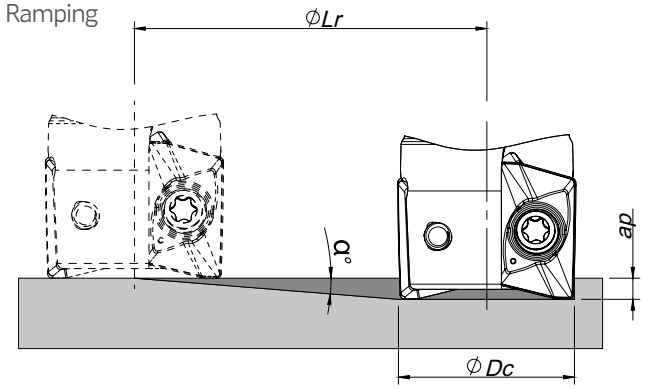

Helical Interpolation

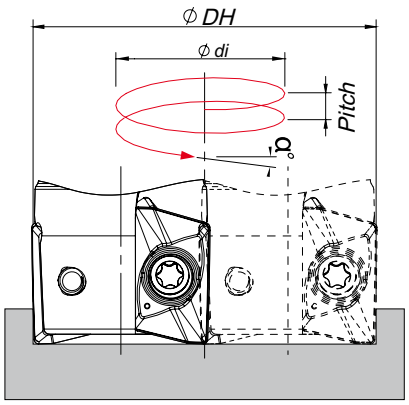

Blind hole
Flat bottom

Ødi = ØDH - ØDc

ØDc	Ramping			Helical Interpolation		
				Diameter for Blind Hole, Flat Bottom Face (1)		Max Pitch/Rev.
	Max Ramp a°	Max a_p	Min Lr	ØDHmin	ØDHmax	
10	5,5	4,0	41,5	17,2 -	- 18,4	2,2 2,5
12	4,0	4,0	57,2	21,2 -	- 22,4	2,0 2,3
16	2,5	4,0	91,6	29,2 -	- 30,4	1,8 2,0
17	2,2	4,0	104,1	31,2 -	- 32,4	1,7 1,9
20	1,9	4,0	120,6	37,2 -	- 38,4	1,8 1,9
21	1,6	4,0	143,2	39,2 -	- 40,4	1,6 1,7
25	1,3	4,0	171,0	47,2 -	- 48,4	1,6 1,7
32	1,0	4,0	229,2	61,2 -	- 62,4	1,6 1,7

(1) using LP insert with radius 0,8 mm

Note: During helical interpolation do not exceed maximum pitch

When using HF insert or other different insert radius to calculate the ØDHmin and ØDHmax use the equation below:
- Minimum Diameter: ØDHmin = 2 x (ØDc - (R corner radius + F width of edge wiper)
- Maximum Diameter: ØDHmax = 2 x (ØDc - R corner radius)
(On HF insert the corner radius should be corner radius programming)

page A-236
page A -244



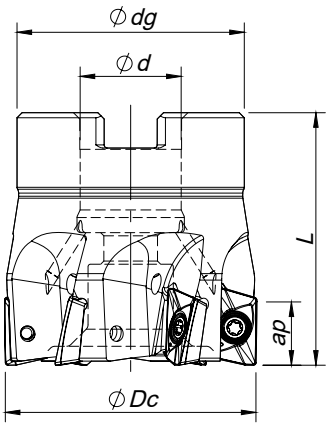

Arbor Mounting

κ_r=90° | γ_p=+8°

Order code Código	Reference Referência Referencia		Dimensions | Dimensões | Dimensiones (mm)				Kg	Max ap (mm)			Arbor Style	Insert Pastilha Inserto	Stock
			ØDc	Ød/M	Ødg	L		LP/MP	HF	MH			
181088600	040A20190-06-08-016040	6	40	16	36	40	0,22	10,0	0,80	3,00	A	XP... 1003...	◉
181088700	050A20190-07-08-022040	7	50	22	42	40	0,31	10,0	0,80	3,00	A	XP... 1003...	◉
181088800	063A20190-08-08-022040	8	63	22	52	40	0,43	10,0	0,80	3,00	A	XP... 1003...	◉

◉ Stock item | Produto de stock | Itens de stock

○ Available under request (see page A-6) | Disponível sobre consulta (consulte a página A-6) | Disponible bajo consulta (mire pagina A-6)



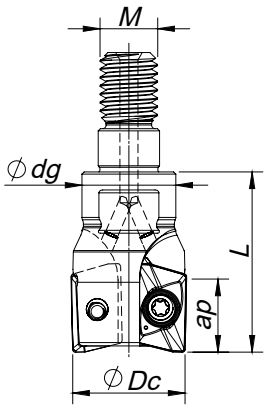

Threaded Coupling

κ_r=90° | γ_p=+5° ~+6°

Order code Código	Reference Referência Referencia		Dimensions | Dimensões | Dimensiones (mm)				Kg	Max ap (mm)			Insert Pastilha Inserto	Stock
			ØDc	Ød/M	Ødg	L		LP/MP	HF	MH		
181088200	016R20190-02-05-M08025	2	16	M8	14	25	0,03	10,0	0,80	3,00	XP... 1003...	◉
181088300	020R20190-03-05-M10030	3	20	M10	18	30	0,06	10,0	0,80	3,00	XP... 1003...	◉
181088400	025R20190-04-05-M12035	4	25	M12	21	35	0,12	10,0	0,80	3,00	XP... 1003...	◉
181088500	032R20190-05-06-M16035	5	32	M16	29	35	0,15	10,0	0,80	3,00	XP... 1003...	◉
181149100	040R20190-06-08-M16043	6	40	M16	29	43	0,25	10,0	0,80	3,00	XP... 1003...	◉

◉ Stock item | Produto de stock | Itens de stock

○ Available under request (see page A-6) | Disponível sobre consulta (consulte a página A-6) | Disponible bajo consulta (mire pagina A-6)





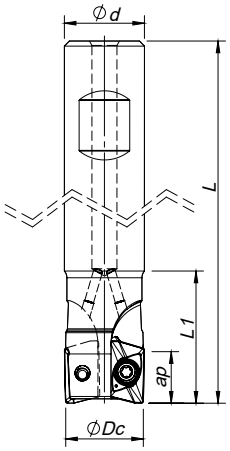

Weldon Shank

κ_r=90° | γ_p=+5°

Order code Código	Reference Referência Referencia		Dimensions | Dimensões | Dimensiones (mm)				Kg	Max ap (mm)			Insert Pastilha Inserto	Stock
			ØDc	Ød/M	L	L1		LP/MP	HF	MH		
181087900	016W20190-02-05-016085	2	16	16	85	32	0,10	10,0	0,80	3,00	XP... 1003...	◉
181100600	016W20190-02-05-016150	2	16	16	150	70	0,13	10,0	0,80	3,00	XP... 1003...	◉
181108600	017W20190-02-05-016150	2	17	16	150	36	0,14	10,0	0,80	3,00	XP... 1003...	◉
181088000	020W20190-03-05-020090	3	20	20	90	28	0,21	10,0	0,80	3,00	XP... 1003...	◉
181100700	020W20190-03-05-020150	3	20	20	150	70	0,26	10,0	0,80	3,00	XP... 1003...	◉
181108700	022W20190-03-05-020150	3	22	20	150	70	0,30	10,0	0,80	3,00	XP... 1003...	◉
181088100	025W20190-04-05-025095	4	25	25	95	30	0,33	10,0	0,80	3,00	XP... 1003...	◉
181100800	025W20190-04-05-025150	4	25	25	150	80	0,36	10,0	0,80	3,00	XP... 1003...	◉
181108800	027W20190-04-05-025150	4	27	25	150	80	0,38	10,0	0,80	3,00	XP... 1003...	◉

◉ Stock item | Produto de stock | Itens de stock

○ Available under request (see page A-6) | Disponível sobre consulta (consulte a página A-6) | Disponible bajo consulta (mire pagina A-6)

SPARE PARTS | Complementos | Repuestos

Order separately

Cutter ØDc	Insert Screw	Key (Torx)	Key (Torx - Nm)	Torque Value
			Nm	Nm
W20190 - 16-27	P0250503	XT08	DT0812	1,2
R20190 - 16-40	P0250503	XT08	DT0812	1,2
A20190 - 40-63	P0250704	XT08	DT0812	1,2

Note: The toolholder is supplied with the XT/PT key. To order the DT key please check the page A-243.
Check the procedures for the clamping screws on the page A-243.

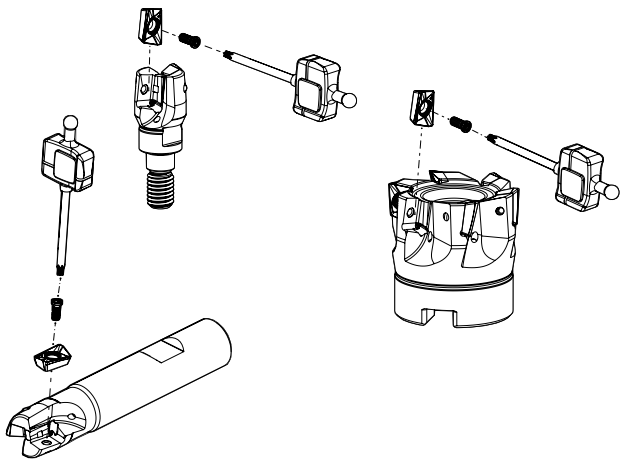

LINEPRO 20190

XP... 1003... | Inserts | Pastilhas | Plaquitas

XPET-LP
(PHS grade)
NEW

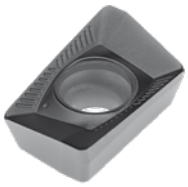

XPET-MP
(PHS grade)
NEW

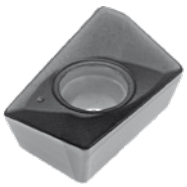

XPET-LN



PHS
NEW
GRADE

XPET-LP | MP | LN

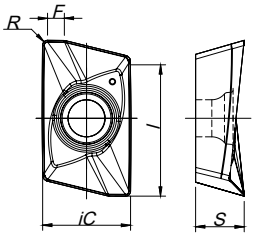

XPET-HF
(HiFeed geometry)



XPET-HF

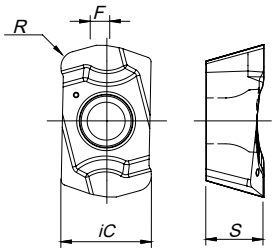

XPHW-MH
(finishing geometry)
NEW

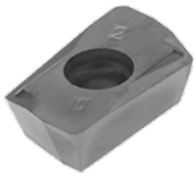

XPHW-MH

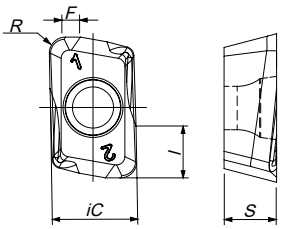

		P						M		K						N		S		H			Dimensions Dimensões Dimensiones (mm)				
		CVD	PVD					PVD		CVD		PVD				UNC	PCD	PVD		PVD	PCBN						
	(2) Grade code	T9	P7	G1	G4	P3	G6	P3	G6	L5	L9	G1	G4	P3	G6	10	D6	P3	G6	P7	S6	D4					
(1) Geometry code	ISO Reference	PHS740	PH7603	PH7910	PH7920	PH7930	PH7740	PH7930	PH7740	PH5705	PH5740	PH7910	PH7920	PH7930	PH7740	PH0910	PDP410	PH7930	PH7740	PH7603	PBL603	PBH910	iC	S	l	R	F
1111980	XPET 100304 PDER-LP				●	○		●					●	○				●					6,95	3,96	10,50	0,40	1,30
NEW 1111981	XPET 100308 PDER-LP	○			●	○		●					●	○				●					6,95	3,96	10,50	0,80	1,40
1112022	XPET 100316 PDER-LP				●	○		●					●	○				●					6,95	3,96	10,50	1,60	0,80
1111982	XPET 100304 PDSR-MP			○	●	○		●		●	○	○	○	○									6,95	3,96	10,50	0,40	1,10
NEW 1111983	XPET 100308 PDSR-MP	○		○	●	○		●		●	○	○	○	○									6,95	3,96	10,50	0,80	1,35
1111984	XPET 100304 PDFR-LN															●							6,95	3,96	10,50	0,40	0,75
NEW 1112906	XPET 100308 PDFR-LN															●							6,95	3,96	10,50	0,80	1,05
1111985	XPET 100312 PDFR-LN															●							6,95	3,96	10,50	1,20	0,75
1112376	XPET 100312 ZDR-HF			○	●	○		●				○	●	○				●					6,95	3,96	-	1,20	1,50
NEW 1112500	XPHW 100308 ZER-MH		○	●																●		○	6,95	3,60	3,00	0,80	1,30
NEW 1112736	XPHW 100310 ZER-MH		○	○																○		○	6,95	3,60	3,00	1,00	0,35
NEW 1112735	XPHW 100320 ZER-MH		○	○																○		○	6,95	3,60	3,00	1,20	1,10

● First choice | Primeira opção | 1ª opción ○ Stock item | Produto de stock | Itens de stock ○ Available under request (see page A-7) | Disponível sobre consulta (consulte a página A-7) | Disponible bajo consulta (mire pagina A-7)

Insert order code = (1) Geometry Code + (2) Grade Code

PROGRAMMING DATA | Dados para programação | Datos para la programación

Insert	Programming Data		
	Rp	X	b
XPET 10 HF	1,6	0,33	3,45

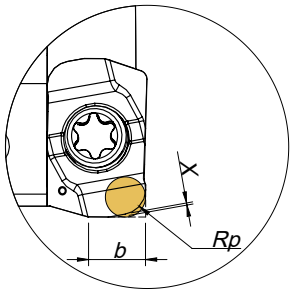

RAMPING AND HELICAL INTERPOLATION

Descida em rampa e interpolação helicoidal | Bajada en rampa e interpolación circular

Ramping

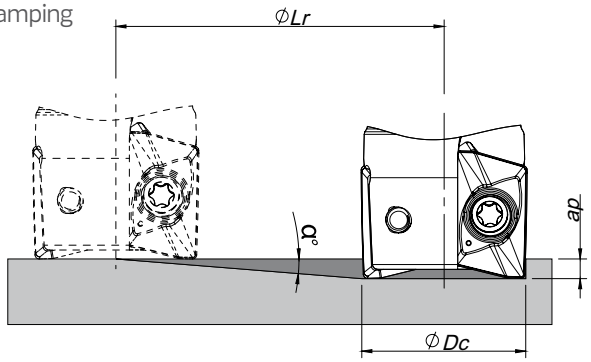

Helical Interpolation

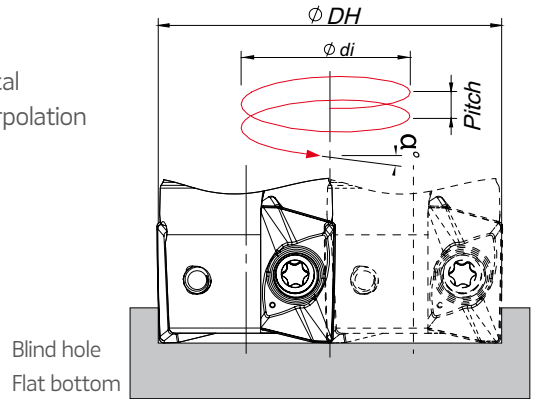

Ødi = ØDH - ØDc

ØDc	Ramping			Helical Interpolation		
				Diameter for Blind Hole, Flat Bottom Face (1)		Max Pitch/Rev.
	Max Ramp a°	Max a_p	Min Lr	ØDHmin	ØDHmax	
16	7,5	10,0	76,0	27,6 -	- 30,4	4,8 6,0
17	7,0	10,0	81,4	29,6 -	- 32,4	4,9 5,9
20	5,0	10,0	114,3	35,6 -	- 38,4	4,3 5,1
22	4,5	10,0	127,1	39,6 -	- 42,4	4,3 5,0
25	3,5	10,0	163,5	45,6 -	- 48,4	4,0 4,5
27	3,0	10,0	190,8	49,6 -	- 52,4	3,7 4,2
32	2,5	10,0	229,0	59,6 -	- 62,4	3,8 4,2
40	1,7	10,0	336,9	75,6 -	- 78,4	3,3 3,6
50	1,3	10,0	440,7	95,6 -	- 98,4	3,2 3,4
63	1,0	10,0	572,9	121,6 -	- 124,4	3,2 3,4

(1) using LP insert with radius 0,8 mm

Note: During helical interpolation do not exceed maximum pitch
When using HF insert or other different insert radius to calculate the ØDHmin and ØDHmax use the equation below:
- Minimum Diameter: ØDHmin = 2 x (ØDc - (R corner radius + F width of edge wiper))
- Maximum Diameter: ØDHmax = 2 x (ØDc - R corner radius)

page A-236
page A -244

LINEPRO 20190

GRADES SELECTION GUIDE | Guia para selecção de graus | Tabla para selección de calidades

ISO	PSM	Material	HB (Brinell)	Grades ← Wear Resistance — Toughness → PH7603	PH0910	PH7910	PH5705	PH7920	PH7930	PH5740	PHS740
P	1	Unalloyed Steel	125-220	✓		✓		✓	✓		✓
	2	Low-Alloyed Steel	220-280	✓		✓		✓	✓		✓
	3	High-Alloyed Steel	280-380	✓		✓		✓	✓		✓
M	4	SS - Ferritic / Martensitic	200-330						✓		
	5	SS - Austenitic	200-330						✓		
	6	SS - Austenitic-ferritic (Duplex)	230-260						✓		
K	7	Malleable Cast Iron	130-230			✓	✓	✓		✓	
	8	Grey Cast Iron	180-245			✓	✓	✓		✓	
	9	Nodular Cast iron	160-250			✓	✓	✓		✓	
N	10	Aluminium and Non Ferrous	30-130		✓						
S	11	Heat Resistant Super Alloys	200-320						✓		
H	12	Hardened Steels	40-55 HRC	✓							

Good Conditions
Average Conditions
Difficult Conditions

RECOMMENDED CUTTING CONDITIONS | Condições de corte recomendadas | Condiciones de corte recomendables

ISO	PSM	Material	HB (Brinell)	Vc (m/min) ← Wear Resistance — Toughness → PH7603	PH0910	PH7910	PH5705	PH7920	PH7930	PH5740	PHS740
P	1	Unalloyed Steel	125-220	200-260	-	180-240	-	160-220	140-200	-	120-150
	2	Low-Alloyed Steel	220-280	190-270	-	170-250	-	150-230	130-180	-	110-170
	3	High-Alloyed Steel	280-380	180-230	-	160-210	-	140-190	100-170	-	100-130
M	4	SS - Ferritic / Martensitic	200-330	-	-	-	-	-	130-220	-	-
	5	SS - Austenitic	200-330	-	-	-	-	-	120-180	-	-
	6	SS - Austenitic-ferritic (Duplex)	230-260	-	-	-	-	-	70-140	-	-
K	7	Malleable Cast Iron	130-230	-	-	170-380	160-390	160-350	140-260	120-240	-
	8	Grey Cast Iron	180-245	-	-	160-330	150-320	150-300	130-220	110-200	-
	9	Nodular Cast iron	160-250	-	-	130-280	120-280	120-260	100-180	90-170	-
N	10	Aluminium and Non Ferrous	30-130	-	350-1400	-	-	-	-	-	-
S	11	Heat Resistant Super Alloys	200-320	-	-	-	-	-	35-65	-	-
H	12	Hardened Steels	40-55 HRC	120-260	-	-	-	-	-	-	-

(Note 1): Cutting conditions $a_e/Dc=70\%$.

(Note 2): PH5... and PHS... can be used wet or dry. PH7... use only air.

(Note 3):

Operation	a_e	Vc & fz	a_p (mm)
Slotting	100%	<20%	2,0-4,0
Shouldering	<50%	>8%	3,0-6,0
	≤25%	>12%	7,0-9,0

(Note 4):

It's possible to occur vibrations in certain cases. Please reduce depth of cut and / or reduce cutting conditions in following cases:
- When using long shank;
- When using long tool overhang with arbor type;
- When application has poor clamping rigidity or when using a low rigidity machine.

CHIP-BREAKER SELECTION GUIDE | Guia para aplicações do quebra-aparas | Guía para aplicación del rompevirutas

ISO	PSM	Material	HB (Brinell)	Chip-Breaker Application	
				1st choise	Dificult Operations
P	1	Unalloyed Steel	125-220	XPET 10 ... LP/HF	XPET 10 ... MP
	2	Low-Alloyed Steel	220-280	XPET 10 ... LP/HF	XPET 10 ... MP
	3	High-Alloyed Steel	280-380	XPET 10 ... MP/HF	-
M	4	SS - Ferritic / Martensitic	200-330	XPET 10 ... LP/HF	-
	5	SS - Austenitic	200-330	XPET 10 ... LP/HF	-
	6	SS - Austenitic-ferritic (Duplex)	230-260	XPET 10 ... LP/HF	-
K	7	Malleable Cast Iron	130-230	XPET 10 ... LP/HF	XPET 10 ... MP
	8	Grey Cast Iron	180-245	XPET 10 ... MP/HF	-
	9	Nodular Cast iron	160-250	XPET 10 ... MP/HF	-
N	10	Aluminium and Non Ferrous	30-130	XPET 10 ... LN	-
S	11	Heat Resistant Super Alloys	200-320	XPET 10 ... LP/HF	-
H	12	Hardened Steels	40-55 HRC	XPHW 10 ... MH	-

Feed fz (mm/t)				
XPET 10... LP	XPET 10... MP	XPET 10... LN	XPET 10... HF	XPHW 10... MH
0,08-0,20	0,10-0,25	-	0,40-0,80	0,10-0,25
0,08-0,20	0,10-0,20	-	0,40-0,80	0,10-0,25
0,08-0,15	0,10-0,20	-	0,40-0,60	0,10-0,25
0,08-0,20	0,10-0,20	-	0,40-0,70	-
0,08-0,20	0,10-0,20	-	0,40-0,70	-
0,08-0,15	0,10-0,20	-	0,40-0,60	-
0,08-0,20	0,10-0,25	-	0,50-0,80	-
0,08-0,20	0,10-0,25	-	0,50-0,80	-
0,08-0,20	0,10-0,20	-	0,50-0,60	-
-	-	0,07-0,25	-	-
0,05-0,07	-	-	0,40-0,60	-
-	-	-	-	0,08-0,15

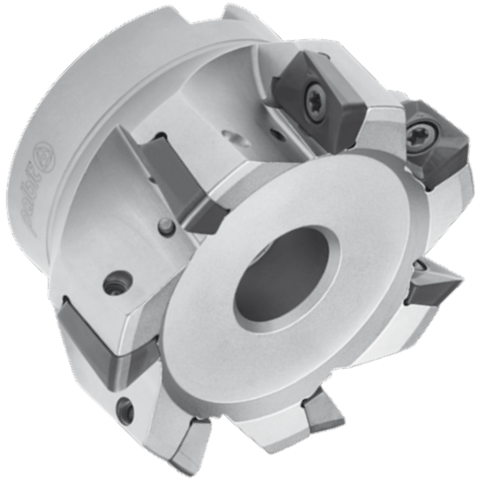

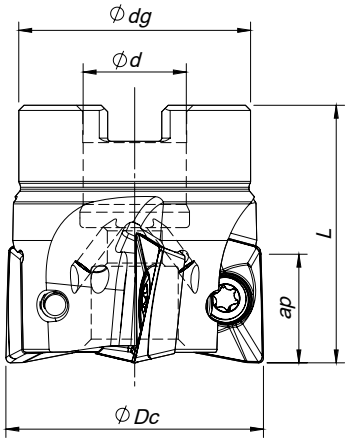

Arbor Mounting

K_r=90° | γ_p=+7° ~+8°

Order code Código	Reference Referência Referencia		Dimensions | Dimensões | Dimensiones (mm)				Kg	Specifications		Insert Pastilha Inserto	Stock
			ØDc	Ød/M	Ødg	L		Arbor Type	Ap max (mm)		
181090900	040A20290-04-07-016040	4	40	16	32	40	0,18	A	17,0	XPET 1706...	
181091000	050A20290-05-08-022040	5	50	22	42	40	0,29	A	17,0	XPET 1706...	
181091100	063A20290-06-08-027040	6	63	27	52	40	0,53	A	17,0	XPET 1706...	
181091200	080A20290-07-08-027050	7	80	27	60	50	0,92	A	17,0	XPET 1706...	
181091300	100A20290-08-08-032050	8	100	32	80	50	1,68	A	17,0	XPET 1706...	
181091400	125A20290-09-08-040063	9	125	40	90	63	3,01	A	17,0	XPET 1706...	

Stock item | Produto de stock | Itens de stock

Available under request (see page A-6) | Disponível sobre consulta (consulte a página A-6) | Disponible bajo consulta (mire pagina A-6)



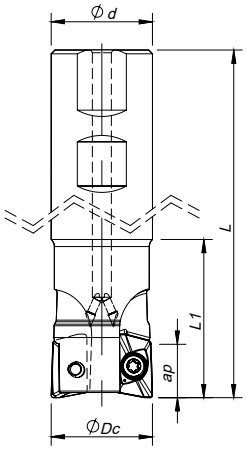

Weldon Shank

K_r=90° | γ_p=+6° ~+7°

Order code Código	Reference Referência Referencia		Dimensions | Dimensões | Dimensiones (mm)				Kg	Specifications	Insert Pastilha Inserto	Stock
			ØDc	Ød/M	L	L1		Ap max (mm)		
181090500	032W20290-02-06-032110	2	32	32	110	50	0,56	17,0	XPET 1706...	
181090600	032W20290-02-06-032200	2	32	32	200	60	1,10	17,0	XPET 1706...	
181090700	040W20290-03-07-032115	3	40	32	115	50	0,67	17,0	XPET 1706...	
181090800	040W20290-03-07-032200	3	40	32	200	60	1,19	17,0	XPET 1706...	

Stock item | Produto de stock | Itens de stock

Available under request (see page A-6) | Disponível sobre consulta (consulte a página A-6) | Disponible bajo consulta (mire pagina A-6)

Shouldering | Facing | Slotting | Ramp down | Helical Interpolation | Plunging

XPET 1706... | Inserts | Pastilhas | Plaquitas

XPET-LP

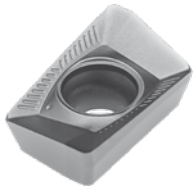

XPET-MP (PHS grade) NEW



XPET-LN

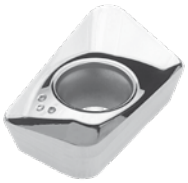

PHS NEW GRADE

XPET-LP | MP | LN

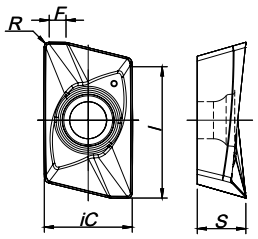

		P					M			K						N		S		H			Dimensions Dimensões Dimensiones (mm)				
		CVD	PVD				CVD	PVD		CVD		PVD				UNC	PCD	PVD		PVD	PCBN					
	(2) Grade code	T9	P7	G4	P3	G6	R1	G4	G6	L5	L9	G1	G4	P3	G6	10	D6	P3	G6	P7	S6	D4				
(1) Geometry code	ISO Reference	PHS740	PH7603	PH7920	PH7930	PH7740	PHM740	PH7920	PH7740	PH5705	PH5740	PH7910	PH7920	PH7930	PH7740	PH0910	PDP410	PH7930	PH7740	PH7603	PBL603	PBH910	iC	S	l	R	F
1111986	XPET 170608 PDER-LP			◎		◎			◎				◎		◎				◎				11,30	6,35	17,50	0,80	1,80
1111987	XPET 170616 PDER-LP			◎		◎			◎				◎		◎				◎				11,30	6,35	17,50	1,60	1,20
NEW 1111988	XPET 170608 PDSR-MP	◈		◎		◈			◎	◎	◈		◎		◈								11,30	6,35	17,50	0,80	1,80
1111989	XPET 170616 PDSR-MP			◎		◈			◎	◎	◈		◎		◈								11,30	6,35	17,50	1,60	1,00
1111990	XPET 170608 PDFR-LN															◎							11,30	6,35	17,50	0,80	1,20
1111991	XPET 170620 PDFR-LN															◎							11,30	6,35	17,50	2,00	1,00
1111992	XPET 170632 PDFR-LN															◎							11,30	6,35	17,50	3,20	0,80

◎ First choice | Primeira opção | 1ª opción ◈ Stock item | Produto de stock | Itens de stock ○ Available under request (see page A-7) | Disponível sobre consulta (consulte a página A-7) | Disponible bajo consulta (mire pagina A-7)

Insert order code = (1) Geometry Code + (2) Grade Code

SPARE PARTS | Complementos | Repuestos

Order separately

Cutter ØDc	Insert Screw	Key (Torx)	Key (Torx - Nm)	Torque Value
W20290 - 32-40	P0451001	XT20	DT2050	5,0
A20290 - 40-80	P0451001	XT20	DT2050	5,0
A20290 - 100-125	P0451001	PT20	DT2050	5,0

Note: The toolholder is supplied with the XT/PT key. To order the DT key please check the page A-243.
Check the procedures for the clamping screws on the page A-243.

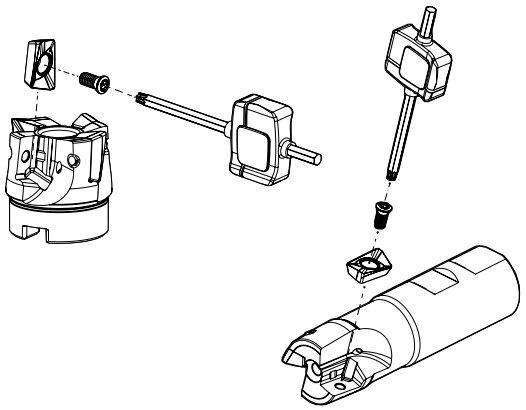

page A-236 page A -244

LINEPRO 20290

GRADES SELECTION GUIDE | Guia para selecção de graus | Tabla para selección de calidades

ISO	PSM	Material	HB (Brinell)	Grades ← Wear Resistance — Toughness → PH0910	PH5705	PH7920	PH5740	PHS740	PH7740
P	1	Unalloyed Steel	125-220			✓		✓	✓
	2	Low-Alloyed Steel	220-280			✓		✓	✓
	3	High-Alloyed Steel	280-380			✓		✓	✓
M	4	SS - Ferritic / Martensitic	200-330						✓
	5	SS - Austenitic	200-330						✓
	6	SS - Austenitic-ferritic (Duplex)	230-260						✓
K	7	Malleable Cast Iron	130-230		✓	✓	✓		✓
	8	Grey Cast Iron	180-245		✓	✓	✓		✓
	9	Nodular Cast iron	160-250		✓	✓	✓		✓
N	10	Aluminium and Non Ferrous	30-130	✓					
S	11	Heat Resistant Super Alloys	200-320						✓

Good Conditions
Average Conditions
Difficult Conditions

CHIP-BREAKER SELECTION GUIDE | Guia para aplicações do quebra-aparas | Guía para aplicación del rompevirutas

ISO	PSM	Material	HB (Brinell)	Chip-Breaker Application 1st choise	Dificult Operations
P	1	Unalloyed Steel	125-220	XPET 17 ... LP	XPET 17 ... MP
	2	Low-Alloyed Steel	220-280	XPET 17 ... LP	XPET 17 ... MP
	3	High-Alloyed Steel	280-380	XPET 17 ... MP	-
M	4	SS - Ferritic / Martensitic	200-330	XPET 17 ... LP	-
	5	SS - Austenitic	200-330	XPET 17 ... LP	-
	6	SS - Austenitic-ferritic (Duplex)	230-260	XPET 17 ... LP	-
K	7	Malleable Cast Iron	130-230	XPET 17 ... LP	XPET 17 ... MP
	8	Grey Cast Iron	180-245	XPET 17 ... MP	-
	9	Nodular Cast iron	160-250	XPET 17 ... MP	-
N	10	Aluminium and Non Ferrous	30-130	XPET 17 ... LN	-
S	11	Heat Resistant Super Alloys	200-320	XPET 17 ... LP	-

RECOMMENDED CUTTING CONDITIONS | Condições de corte recomendadas | Condiciones de corte recomendables

ISO	PSM	Material	HB (Brinell)	Vc (m/min) ← Wear Resistance PH0910	PH5705	PH7920
P	1	Unalloyed Steel	125-220	-	-	160-280
	2	Low-Alloyed Steel	220-280	-	-	150-230
	3	High-Alloyed Steel	280-380	-	-	140-190
M	4	SS - Ferritic / Martensitic	200-330	-	-	-
	5	SS - Austenitic	200-330	-	-	-
	6	SS - Austenitic-ferritic (Duplex)	230-260	-	-	-
K	7	Malleable Cast Iron	130-230	-	160-380	160-350
	8	Grey Cast Iron	180-245	-	150-320	150-300
	9	Nodular Cast iron	160-250	-	120-280	120-260
N	10	Aluminium and Non Ferrous	30-130	350-1400	-	-
S	11	Heat Resistant Super Alloys	200-320	-	-	-

(Note 1) Cutting conditions ae/DC=70%
(Note 2) Cutting conditions should be ajusted according to the machine and work rigidity.
(Note 3):

Operation	a_e	Vc & fz	a_p (mm)
Slotting	100%	<20%	2,0-6,0
Shouldering	<50%	>8%	7,0-13,0
	≤25%	>12%	13,0-16,0

(Note 4) It's possible to occur vibrations in certain cases.
Please reduce depth of cut and / or reduce cutting conditions in following cases:
- When using long shank;
- When using long tool overhang with arbor type;
- When application has poor clamping rigidity or when using a low rigidity machine.

RAMPING AND HELICAL INTERPOLATION

Descida em rampa e interpolação helicoidal | Bajada en rampa e interpolación circular

Ramping

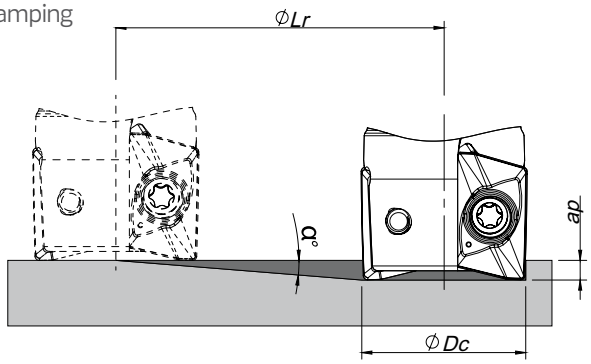

Helical Interpolation

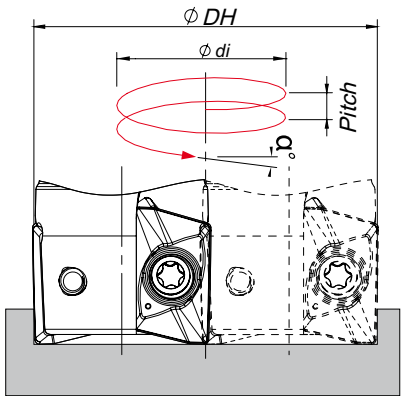

Ødi = ØDH - ØDc

ØDc	Ramping			Helical Interpolation		
				Diameter for Blind Hole, Flat Bottom Face (1)		Max Pitch/Rev.
	Max Ramp a°	Max a_p	Min Lr	ØDHmin	ØDHmax	
32	3,8	17,0	255,9	58,8 -	- 62,4	5,6 6,3
40	2,7	17,0	360,5	74,8 -	- 78,4	5,2 5,7
50	2,0	17,0	486,8	94,8 -	- 98,4	4,9 5,3
63	1,5	17,0	649,2	120,8 -	- 124,4	4,8 5,0
80	1,0	17,0	973,9	154,8 -	- 158,4	4,1 4,3
100	0,8	17,0	1217,5	194,8 -	- 198,4	4,2 4,3
125	0,7	17,0	1498,4	244,8 -	- 248,4	4,3 4,4

(1) using LP insert with radius 0,8 mm
Note: During helical interpolation do not exceed maximum pitch
When using HF insert or other different insert radius to calculate the ØDHmin and ØDHmax use the equation below:
- Minimum Diameter: ØDHmin = 2 x (ØDc - (R corner radius + F width of edge wiper))
- Maximum Diameter: ØDHmax = 2 x (ØDc - R corner radius)

Vc (m/min) Toughness →			Feed fz (mm/t)		
PH5740	PHS740	PH7740	XPET 17... LP	XPET 17... MP	XPET 17... LN
-	140-220	140-220	0,10-0,35	0,10-0,35	-
-	130-180	130-180	0,10-0,35	0,10-0,35	-
-	100-170	100-170	0,10-0,30	0,10-0,30	-
-	-	130-220	0,10-0,30	0,10-0,30	-
-	-	120-180	0,10-0,30	0,10-0,30	-
-	-	70-140	0,10-0,25	0,10-0,25	-
150-300	-	140-260	0,10-0,35	0,10-0,35	-
140-250	-	130-220	0,10-0,35	0,10-0,35	-
120-220	-	100-180	0,10-0,30	0,10-0,30	-
-	-	-	-	-	0,10-0,35
-	-	30-65	0,10-0,20	-	-

page A-236
page A -244



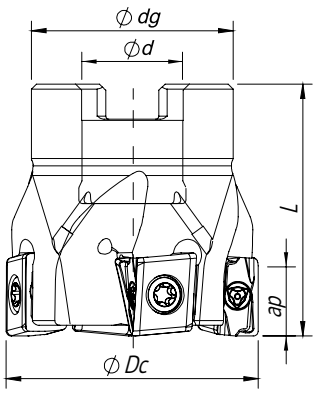

Arbor Mounting

K_r=90° | γ_p=-4°

Order code Código	Reference Referência Referencia		Dimensions | Dimensões | Dimensiones (mm)				Kg	Specifications		Insert	Stock
			ØDc	Ød/M	ØDg	L		Ap max (mm)	Arbor Type		
181144400	040A90090-04-04-016040	4	40	16	36	40	0,24	7,0	A	LNXT 0904...	◈
181144500	050A90090-05-04-022040	5	50	22	40	40	0,32	7,0	A	LNXT 0904...	◈
181144600	063A90090-07-04-022040	7	63	22	48	40	0,54	7,0	A	LNXT 0904...	◈
181146600	063A90090-10-04-022040	10	63	22	48	40	0,54	7,0	A	LNXT 0904...	○

◈ Stock item | Produto de stock | Itens de stock

○ Available under request (see page A-6) | Disponível sobre consulta (consulte a página A-6) | Disponible bajo consulta (mire pagina A-6)



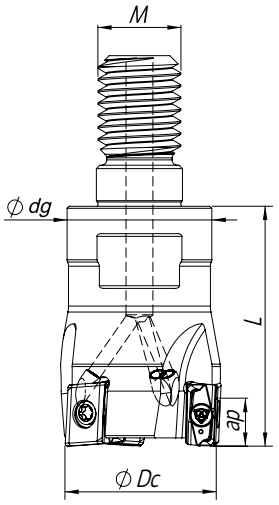

Threaded Coupling

K_r=90° | γ_p=-4°

Order code Código	Reference Referência Referencia		Dimensions | Dimensões | Dimensiones (mm)				Kg	Specifications	Insert	Stock
			ØDc	Ød/M	Ødg	L		Ap max (mm)		
181144200	025R90090-03-04-M12035	3	25	12	21	35	0,10	7,0	LNXT 0904...	◈
181144300	032R90090-04-04-M16040	4	32	16	29	40	0,21	7,0	LNXT 0904...	◈

◈ Stock item | Produto de stock | Itens de stock

○ Available under request (see page A-6) | Disponível sobre consulta (consulte a página A-6) | Disponible bajo consulta (mire pagina A-6)

NEW

Shouldering Facing Slotting



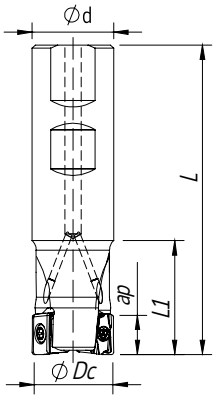

Weldon Shank

K_r = 90° | γ_p = -4° ~ -6°

Order code Código	Reference Referência Referencia		Dimensions | Dimensões | Dimensiones (mm)				Kg	Specifications	Insert	Stock
			ØDc	Ød/M	L	L1		Ap max (mm)		
181109400	016W90090-02-06-016090	2	16	16	90	25	0,12	7,0	LNXT 0904...	⊛
181109500	025W90090-03-04-025095	3	25	25	95	30	0,31	7,0	LNXT 0904...	⊛
181144100	032W90090-04-04-032110	4	32	32	110	30	0,61	7,0	LNXT 0904...	⊛

⊛ Stock item | Produto de stock | Itens de stock ◯ Available under request (see page A-6) | Disponível sobre consulta (consulte a página A-6) | Disponible bajo consulta (mire pagina A-6)



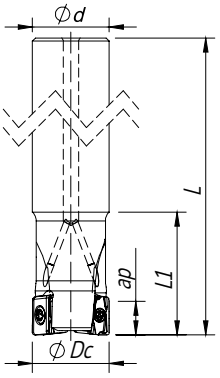

Cylindrical Shank

K_r = 90° | γ_p = -4°

Order code Código	Reference Referência Referencia		Dimensions | Dimensões | Dimensiones (mm)				Kg	Specifications	Insert	Stock
			ØDc	Ød/M	L	L1		Ap max (mm)		
181148100	025E90090-03-04-025200	3	25	25	200	30	0,31	7,0	LNXT 0904...	◯
181148200	032E90090-04-04-032250	4	32	32	250	30	0,78	7,0	LNXT 0904...	◯

⊛ Stock item | Produto de stock | Itens de stock ◯ Available under request (see page A-6) | Disponível sobre consulta (consulte a página A-6) | Disponible bajo consulta (mire pagina A-6)

TGPLUS 90090 NEW

LNXT 0904... | Inserts | Pastilhas | Plaquitas

LNXT-MP NEW
(PHS grade)



PHS
NEW
GRADE

LNXT-MP

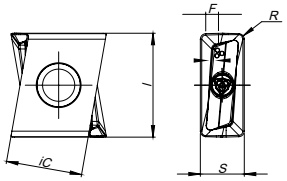

		P					M				K						N		S		H	Dimensions Dimensões Dimensiones (mm)				
		CVD	PVD				CVD	PVD			CVD		PVD				UNC	PCD	PVD		PVD					
	(2) Grade code	T9	P7	G1	G4	P3	R1	G4	P3	G6	L5	L6	G1	G4	P3	G6	10	D6	P3	G6	P7					
(1) Geometry code	ISO Reference	PHS740	PH7603	PH7910	PH7920	PH7930	PHM740	PH7920	PH7930	PH7740	PH5705	PH5320	PH7910	PH7920	PH7930	PH7740	PH0910	PDP410	PH7930	PH7740	PH7603	iC	S	I	R	F
1112225	LNXT 090404 PNER-MP	◈			◈					◈		◈		◈		◈						-	4,5	9,0	0,4	-
1112226	LNXT 090408 PNER-MP	◈			◈					◈		◈		◈		◈						-	4,5	9,0	0,8	-

◈ First choice | Primeira opção | 1ª opción ◈ Stock item | Produto de stock | Itens de stock ◯ Available under request (see page A-7) | Disponível sobre consulta (consulte a página A-7) | Disponible bajo consulta (mire pagina A-7)

Insert order code = (1) Geometry Code + (2) Grade Code

SPARE PARTS | Complementos | Repuestos

Order separately

Cutter ØDc	Insert Screw	Key (Torx)	Key (Torx - Nm)	Torque Value
			Nm	Nm
E90090 - 25-32	P0250700	XT07	DT0709	1,2
W90090 - 16-32	P0250700	XT07	DT0709	1,2
A90090 - 40-63	P0250700	XT07	DT0709	1,2
R90090 - 25-32	P0250700	XT07	DT0709	1,2

Note: The toolholder is supplied with the XT/PT key. To order the DT key please check the page A-243.
Check the procedures for the clamping screws on the page A-243.

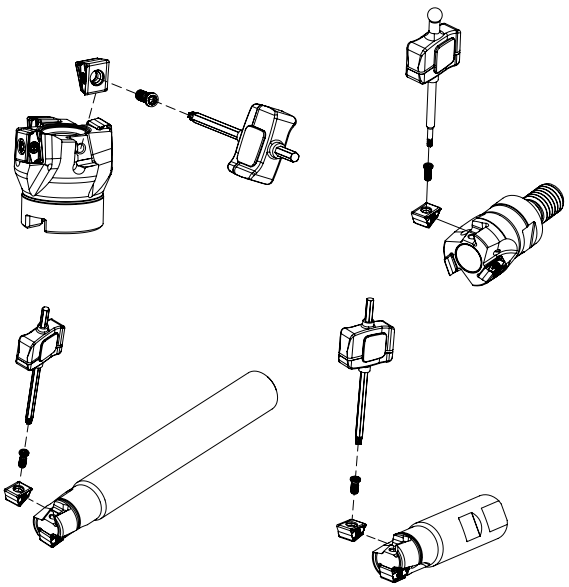

NEW

GRADES SELECTION GUIDE | Guia para selecção de graus | Tabla para selección de calidades

ISO	PSM	Material	HB (Brinell)	Grades ← Wear Resistance			Toughness →
				PH5320	PH7920	PHS740	PH7740
P	1	Unalloyed Steel	125-220		✓	✓	
	2	Low-Alloyed Steel	220-280		✓	✓	
	3	High-Alloyed Steel	280-380		✓	✓	
M	4	SS - Ferritic / Martensitic	200-330				✓
	5	SS - Austenitic	200-330				✓
	6	SS - Austenitic-ferritic (Duplex)	230-260				✓
K	7	Malleable Cast Iron	130-230	✓	✓		✓
	8	Grey Cast Iron	180-245	✓	✓		✓
	9	Nodular Cast iron	160-250	✓	✓		✓

Good Conditions
Average Conditions
Difficult Conditions

RECOMMENDED CUTTING CONDITIONS | Condições de corte recomendadas | Condiciones de corte recomendables

ISO	PSM	Material	HB (Brinell)	Vc (m/min) ← Wear Resistance			Toughness →	Feed fz (mm/t)
				PH5320	PH7920	PHS740	PH7740	LNXT 09... MP
P	1	Unalloyed Steel	125-220	-	180-250	140-170	-	0,08-0,25
	2	Low-Alloyed Steel	220-280	-	170-210	130-160	-	0,08-0,25
	3	High-Alloyed Steel	280-380	-	160-200	110-140	-	0,08-0,15
M	4	SS - Ferritic / Martensitic	200-330	-	-	-	120-180	0,08-0,25
	5	SS - Austenitic	200-330	-	-	-	100-150	0,08-0,20
	6	SS - Austenitic-ferritic (Duplex)	230-260	-	-	-	70-130	0,08-0,15
K	7	Malleable Cast Iron	130-230	180-320	170-300	-	160-270	0,08-0,30
	8	Grey Cast Iron	180-245	160-270	150-250	-	140-230	0,08-0,25
	9	Nodular Cast iron	160-250	100-230	90-210	-	90-200	0,08-0,20

(Note 1) Cutting conditions $a_e/Dc=70\%$.

(Note 2) It's possible to occur vibrations in certain cases. Please reduce depth of cut and / or reduce cutting conditions in following cases:
- When using long shank;
- When using long tool overhang with arbor type;
- When application has poor clamping rigidity or when using a low rigidity machine.

TGPLUS 90190



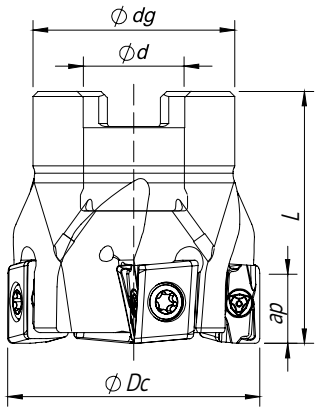

Arbor Mounting

K_r=90° | γ_p=-4°

Order code Código	Reference Referência Referencia		Dimensions | Dimensões | Dimensiones (mm)				Kg	Specifications		Insert	Stock
			ØDc	Ød/M	Ødg	L		Ap max (mm)	Arbor Type		
181118800	040A90190-04-04-016040	4	40	16	32	40	0,17	11	A	LNXT 1306...	●
181118900	040A90190-05-04-016040	5	40	16	32	40	0,18	11	A	LNXT 1306...	●
181111200	050A90190-05-04-022040	5	50	22	42	40	0,27	11	A	LNXT 1306...	●
181111300	050A90190-06-04-022040	6	50	22	42	40	0,28	11	A	LNXT 1306...	○
181119000	063A90190-06-04-022040	6	63	22	52	40	0,52	11	A	LNXT 1306...	●
181119100	063A90190-08-04-022040	8	63	22	52	40	0,52	11	A	LNXT 1306...	●
181119200	080A90190-07-04-027050	7	80	27	60	50	0,88	11	B	LNXT 1306...	●
181119300	080A90190-10-04-027050	10	80	27	60	50	0,86	11	B	LNXT 1306...	○
181119400	100A90190-09-04-032050	9	100	32	80	50	1,56	11	B	LNXT 1306...	●
181119500	100A90190-13-04-032050	13	100	32	80	50	1,56	11	B	LNXT 1306...	●
181119600	125A90190-11-04-040063	11	125	40	90	63	2,87	11	B	LNXT 1306...	○
181119700	125A90190-16-04-040063	16	125	40	90	63	2,86	11	B	LNXT 1306...	○

● Stock item | Produto de stock | Itens de stock

○ Available under request (see page A-6) | Disponível sobre consulta (consulte a página A-6) | Disponible bajo consulta (mire pagina A-6)



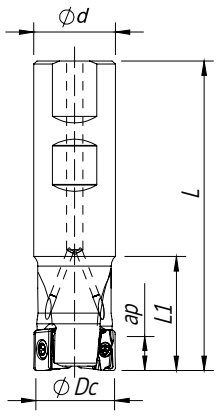

Weldon Shank

K_r = 90° | γ_p = -4°

Order code Código	Reference Referência Referencia		Dimensions | Dimensões | Dimensiones (mm)				Kg	Specifications	Insert	Stock
			ØDc	Ød/M	L	L1		Ap max (mm)		
181118300	025W90190-02-04-025095	2	25	25	95	45	0,29	11	LNXT 1306...	●
181109800	032W90190-03-04-032110	3	32	32	110	50	0,55	11	LNXT 1306...	●
181118400	040W90190-04-04-032110	4	40	32	110	50	0,60	11	LNXT 1306...	●

● Stock item | Produto de stock | Itens de stock

○ Available under request (see page A-6) | Disponível sobre consulta (consulte a página A-6) | Disponible bajo consulta (mire pagina A-6)





Cylindrical Shank

$K_r = 90°$ | $\gamma_p = -4°$

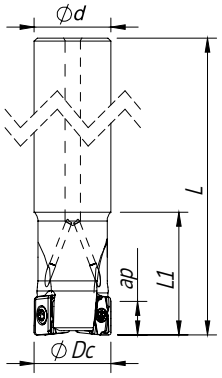

Order code Código	Reference Referência Referencia		Dimensions | Dimensões | Dimensiones (mm)				Kg	Specifications	Insert	Stock
			ØDc	Ød/M	L	L1		Ap max (mm)		
181118500	025E90190-02-04-025200	2	25	25	200	40	0,66	11	LNXT 1306...	○
181118600	032E90190-03-04-032250	3	32	32	250	50	1,37	11	LNXT 1306...	○
181118700	040E90190-04-04-032250	4	40	32	250	50	1,42	11	LNXT 1306...	○

Stock item | Produto de stock | Itens de stock

○ Available under request (see page A-6) | Disponível sobre consulta (consulte a página A-6) | Disponible bajo consulta (mire pagina A-6)

LNXT 1306... | Inserts | Pastilhas | Plaquitas

LNXT-MP
(PHS grade)
NEW



PHS
NEW
GRADE

LNXT-MP

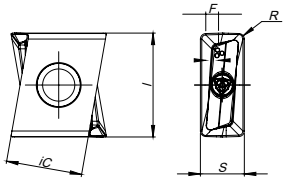

		P						M				K						N		S			H	Dimensions Dimensões Dimensiones (mm)				
		CVD	PVD					CVD	PVD			CVD		PVD				UNC	PCD	PVD			PVD					
	(2) Grade code	T9	P7	G1	G4	P3	G6	R1	G4	P3	G6	L5	L6	G1	G4	P3	G6	10	D6	P3	G6	P7						
(1) Geometry code	ISO Reference	PHS740	PH7603	PH7910	PH7920	PH7930	PH7740	PHM740	PH7920	PH7930	PH7740	PH5705	PH5320	PH7910	PH7920	PH7930	PH7740	PH0910	PDP410	PH7930	PH7740	PH7603						
																							iC	S	l	R	F
1112242	LNXT 130604 PNER-MP				◎		◎				◎		◎		◎		◎						9,8	6,8	13,0	0,4	0,9
NEW 1112243	LNXT 130608 PNER-MP	◎			◎		◎				◎		◎		◎		◎						9,8	6,8	13,0	0,8	0,9

◎ First choice | Primeira opção | 1ª opción ◎ Stock item | Produto de stock | Itens de stock ○ Available under request (see page A-7) | Disponível sobre consulta (consulte a página A-7) | Disponible bajo consulta (mire pagina A-7)

Insert order code = (1) Geometry Code + (2) Grade Code

page A-236
page A -244

TGPLUS 90190

SPARE PARTS | Complementos | Repuestos

Cutter ØDc	Insert Screw	Key (Torx)	Order separately Key (Torx - Nm)	Torque Value	Order separately Screw	DIN 6368 Wrench
E90190 - 25	P0400900	XT15	DT1530	3,0	-	-
E90190 - 32-40	P0401200	XT15	DT1530	3,0	-	-
W90190 - 25	P0400900	XT15	DT1530	3,0	-	-
W90190 - 32-40	P0401200	XT15	DT1530	3,0	-	-
A90190 - 40-63	P0401200	XT15	DT1530	3,0	-	-
A90190 - 80	P0401200	XT15	DT1530	3,0	J0123510	SD6368-12
A90190 - 100	P0401200	XT15	DT1530	3,0	J0164110	SD6368-16
A90190 -125	P0401200	XT15	DT1530	3,0	J0204610	SD6368-20

Note: The toolholder is supplied with the XT/PT key. To order the DT key please check the page A-243.
Check the procedures for the clamping screws on the page A-243.

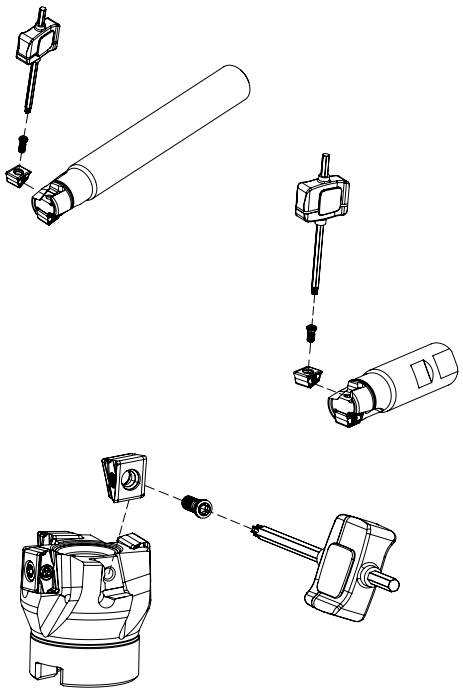

GRADES SELECTION GUIDE | Guia para selecção de graus | Tabla para selección de calidades

ISO	PSM	Material	HB (Brinell)	Grades ← Wear Resistance — Toughness → PH5320	PH7920	PHS740	PH7740
P	1	Unalloyed Steel	125-220		✓	✓	✓
	2	Low-Alloyed Steel	220-280		✓	✓	✓
	3	High-Alloyed Steel	280-380		✓	✓	✓
M	4	SS - Ferritic / Martensitic	200-330				✓
	5	SS - Austenitic	200-330				✓
	6	SS - Austenitic-ferritic (Duplex)	230-260				✓
K	7	Malleable Cast Iron	130-230	✓	✓		✓
	8	Grey Cast Iron	180-245	✓	✓		✓
	9	Nodular Cast iron	160-250	✓	✓		✓

Good Conditions
Average Conditions
Difficult Conditions

RECOMMENDED CUTTING CONDITIONS | Condições de corte recomendadas | Condiciones de corte recomendables

ISO	PSM	Material	HB (Brinell)	Vc (m/min) ← Wear Resistance			Toughness →	Feed fz (mm/t)
				PH5320	PH7920	PHS740	PH7740	LNXT 13... MP
P	1	Unalloyed Steel	125-220	-	180-250	140-170	140-170	0,10-0,35
	2	Low-Alloyed Steel	220-280	-	170-210	130-160	130-160	0,10-0,30
	3	High-Alloyed Steel	280-380	-	160-200	110-140	110-140	0,10-0,20
M	4	SS - Ferritic / Martensitic	200-330	-	-	-	120-180	0,10-0,30
	5	SS - Austenitic	200-330	-	-	-	100-150	0,10-0,25
	6	SS - Austenitic-ferritic (Duplex)	230-260	-	-	-	70-130	0,10-0,20
K	7	Malleable Cast Iron	130-230	180-320	170-300	-	-	0,10-0,35
	8	Grey Cast Iron	180-245	160-270	150-250	-	-	0,10-0,30
	9	Nodular Cast iron	160-250	100-230	90-210	-	-	0,10-0,25

(Note 1) Cutting conditions $a_e/Dc=70\%$.

(Note 2) It's possible to occur vibrations in certain cases. Please reduce depth of cut and / or reduce cutting conditions in following cases:
- When using long shank;
- When using long tool overhang with arbor type;
- When application has poor clamping rigidity or when using a low rigidity machine.

TGPLUS 90390

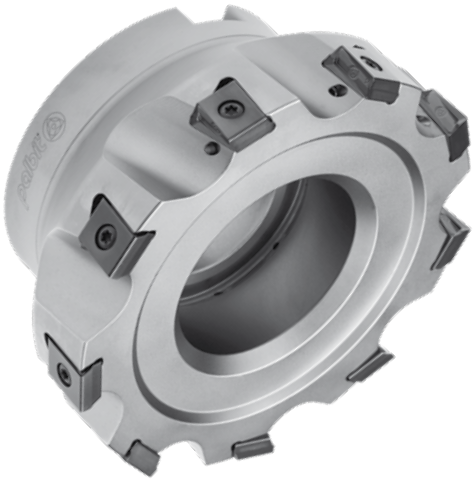

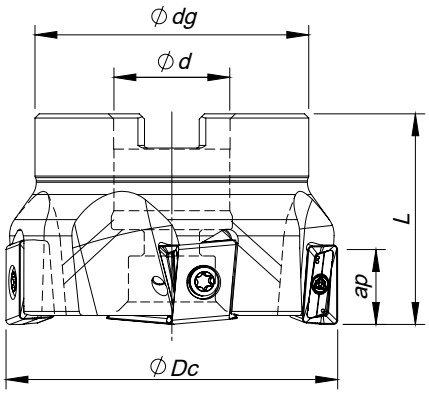

Arbor Mounting

K_r=90° | γ_p=-5°

Order code Código	Reference Referência Referencia		Dimensions | Dimensões | Dimensiones (mm)				Kg	Specifications		Insert Pastilha Inserto	Stock
			ØDc	Ød	Ødg	L		Arbor Type	Ap max (mm)		
181069200	050A90390-05-05-022040	5	50	22	42	40	0,315	A	14,0	LNXT 1506...	◈
181066400	063A90390-05-05-022040	5	63	22	52	40	0,524	A	14,0	LNXT 1506...	◈
181051000	063A90390-08-05-022040	8	63	22	52	40	0,550	A	14,0	LNXT 1506...	◈
181066500	080A90390-07-05-027050	7	80	27	60	50	0,936	B	14,0	LNXT 1506...	◈
181052000	080A90390-10-05-027050	10	80	27	60	50	0,939	B	14,0	LNXT 1506...	◈
181066600	100A90390-08-05-032050	8	100	32	80	50	1,586	B	14,0	LNXT 1506...	◈
181051100	100A90390-12-05-032050	12	100	32	80	50	1,690	B	14,0	LNXT 1506...	◈
181066700	125A90390-09-05-040063	9	125	40	90	63	3,001	B	14,0	LNXT 1506...	◈
181051200	125A90390-15-05-040063	15	125	40	90	63	3,113	B	14,0	LNXT 1506...	◈
181051300	160A90390-10-05-U040063	10	160	40	110	63	4,470	C	14,0	LNXT 1506...	◈
181066800	160A90390-20-05-U040063	20	160	40	110	63	4,580	C	14,0	LNXT 1506...	◈

◈ Stock item | Produto de stock | Itens de stock ○ Available under request (see page A-6) | Disponível sobre consulta (consulte a página A-6) | Disponible bajo consulta (mire pagina A-6)

SPARE PARTS | Complementos | Repuestos

Cutter ØDc	Insert Screw	Key (Torx)	Order separately Key (Torx - Nm)	Torque Value	Order separately Screw	DIN 6368 Wrench
A90390 – 50 - 63	P0401200	XT15	DT1530	3,0	-	-
A90390 – 80	P0401200	XT15	DT1530	3,0	J0123510	SD6368-12
A90390 – 100	P0401200	XT15	DT1530	3,0	J0164110	SD6368-16
A90390 – 125	P0401200	XT15	DT1530	3,0	J0204610	SD6368-20
A90390 – 160	P0401200	XT15	DT1530	3,0	-	-

Note: The toolholder is supplied with the XT/PT key. To order the DT key please check the page A-243.
Check the procedures for the clamping screws on the page A-243.

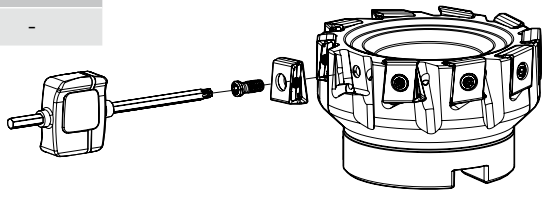



LNXT 1506... | Inserts | Pastilhas | Plaquitas

LNXT-HP

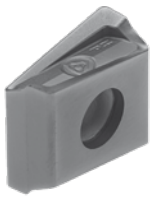

LNXT-MP
(PHS grade)

NEW



PHS
NEW
GRADE

LNXT - MP | HP

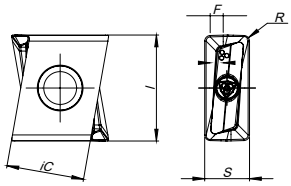

LNXT-W



LNXT-W

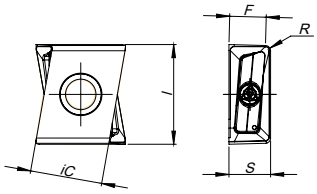

			P						M				K						N		S		H	Dimensions Dimensões Dimensiones (mm)				
			CVD	PVD					CVD	PVD			CVD			PVD			UNC	PCD	PVD		PVD					
		(2) Grade code	T9	P7	G1	G4	P3	G6	R1	G4	P3	G6	L5	L6	L9	G1	G4	G6	10	D6	P3	G6	P7					
	(1) Geometry code	ISO Reference	PH5740	PH7603	PH7910	PH7920	PH7930	PH7740	PHM740	PH7920	PH7930	PH7740	PH5705	PH5320	PH5740	PH7910	PH7920	PH7740	PH0910	PDP410	PH7930	PH7740	PH7603	iC	S	l	R	F
NEW	1111313	LNXT 150608 PNER-MP	◉		◉	◉		◉					◉	○	◉	◉	◉							11,0	6,35	15,0	0,8	1,8
	1111590	LNXT 150612 PNER-MP				◉		◉					◉	○	◉		◉							11,0	6,35	15,0	1,2	1,8
	1111591	LNXT 150608 PNSR-HP			◉	◉		◉								◉	◉	◉						11,0	6,35	15,0	0,8	1,8
	1111524	LNXT 150608 PNER-W			◉								◉	○		◉								11,0	6,35	15,2	0,8	5,5

◉ First choice | Primeira opção | 1ª opción ◉ Stock item | Produto de stock | Itens de stock ○ Available under request (see page A-7) | Disponível sobre consulta (consulte a página A-7) | Disponible bajo consulta (mire pagina A-7)

Insert order code = (1) Geometry Code + (2) Grade Code

GRADES SELECTION GUIDE | Guia para selecção de graus | Tabla para selección de calidades

ISO	PSM	Material	HB (Brinell)	Grades ← Wear Resistance — Toughness → PH5705	PH7910	PH7920	PH5740	PHS740	PH7740
P	1	Unalloyed Steel	125-220		✓	✓		✓	✓
	2	Low-Alloyed Steel	220-280		✓	✓		✓	✓
	3	High-Alloyed Steel	280-380		✓	✓		✓	✓
K	7	Malleable Cast Iron	130-230	✓		✓	✓		
	8	Grey Cast Iron	180-245	✓		✓	✓		
	9	Nodular Cast iron	160-250	✓		✓	✓		

● Good Conditions
● Average Conditions
● Difficult Conditions

page A-236
page A -244

TGPLUS 90390

RECOMMENDED CUTTING CONDITIONS | Condições de corte recomendadas | Condiciones de corte recomendables

ISO	PSM	Material	HB (Brinell)	Vc (m/min) ← Wear Resistance					Toughness →
				PH5705	PH7910	PH7920	PH5740	PHS740	PH7740
P	1	Unalloyed Steel	125-220	-	190-280	180-250	-	140-170	140-170
	2	Low-Alloyed Steel	220-280	-	180-240	170-210	-	130-160	130-160
	3	High-Alloyed Steel	280-380	-	170-220	160-200	-	110-140	110-140
K	7	Malleable Cast Iron	130-230	190-340	180-320	170-300	170-300	-	130-250
	8	Grey Cast Iron	180-245	180-300	170-280	150-250	150-260	-	110-220
	9	Nodular Cast iron	160-250	140-250	100-240	90-210	130-220	-	80-170

ISO	PSM	Material	HB (Brinell)	Feed fz (mm/t)		
				LNXT 15... MP	LNXT 15... HP	LNXT 15... W
P	1	Unalloyed Steel	125-220	0,10-0,30	0,10-0,30	0,10-0,35
	2	Low-Alloyed Steel	220-280	0,10-0,30	0,10-0,30	0,10-0,35
	3	High-Alloyed Steel	280-380	0,10-0,25	0,10-0,25	0,10-0,35
K	7	Malleable Cast Iron	130-230	0,10-0,40	0,10-0,40	0,10-0,50
	8	Grey Cast Iron	180-245	0,10-0,35	0,10-0,35	0,10-0,50
	9	Nodular Cast iron	160-250	0,10-0,30	0,10-0,30	0,10-0,50

(Note 1) Cutting conditions $a_e/Dc=70\%$.

(Note 2) It's possible to occur vibrations in certain cases. Please reduce depth of cut and / or reduce cutting conditions in following cases:
- When using long shank;
- When using long tool overhang with arbor type;
- When application has poor clamping rigidity or when using a low rigidity machine.

CHIP-BREAKER SELECTION GUIDE | Guia para aplicações do quebra-aparas | Guía para aplicación del rompevirutas

ISO	PSM	Material	HB (Brinell)	Chip-Breaker Application	
				1st choise	Dificult Operations
P	1	Unalloyed Steel	125-220	LNXT 15... MP	LNXT 15... HP
	2	Low-Alloyed Steel	220-280	LNXT 15... MP	LNXT 15... HP
	3	High-Alloyed Steel	280-380	LNXT 15... MP	LNXT 15... HP
K	7	Malleable Cast Iron	130-230	LNXT 15... MP	LNXT 15... HP
	8	Grey Cast Iron	180-245	LNXT 15... MP	LNXT 15... HP
	9	Nodular Cast iron	160-250	LNXT 15... MP	LNXT 15... HP

page A-236
page A -244

WIPER INSERTS

Rec. Cutting Conditions
- F_W at least 40% larger than f_n (f_n-f_2xZ);
- Axial depth of cut is 0,5 - 0,8mm.

Example:
- The width of the parallel land (F) of the insert is 1,8mm
- With a cutter of 10 inserts and using a feed per tooth (f_z) of 0,3mm, the feed per revolution (f_n) will be 3mm, i.e. 40% bigger than the parallel land.
- To obtain a good surface finish, the feed per revolution should be a maximum of 80% of 1,8mm = 1,44mm.
- The wiper insert will have a parallel land (F_W) with a width of approximately 5,5mm.
- Result: Feed per revolution (f_n) could be increased from 0,8mm to 60% of 5,5mm = 3,3mm.

Note: Other limitations, such as machine power, must be taken into consideration.

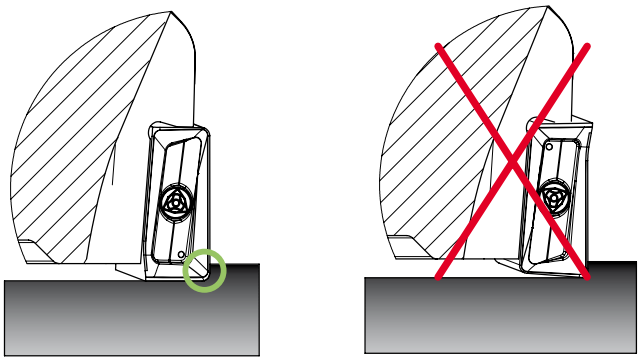

The points on the insert indicates the side that should be parallel to the workspace material.

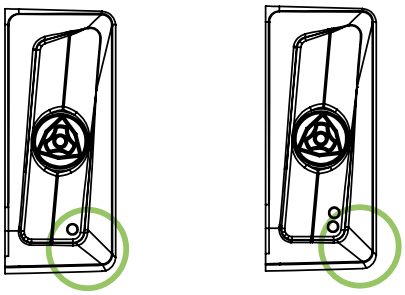

Wiper insert with 2 Right-hand cutting edges.
The side work of the insert it's indicated by points.

ALUPRO 76090



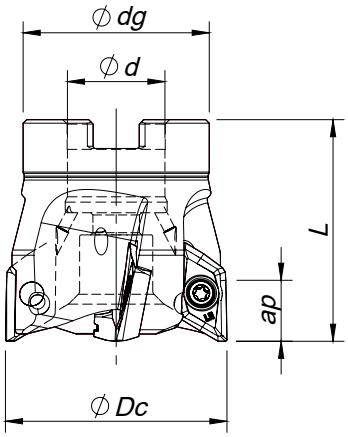

Arbor Mounting

K_r=90° | γ_p=+11°

Order code Código	Reference Referência Referencia		Dimensions | Dimensões | Dimensiones (mm)				Kg	Specifications			Insert radius Raio da pastilha Rayo del Inserto	Stock
			ØDc	Ød	Ødg	L		Cutter Type	Max ap (mm)	rpm max		
181094200	040A76090-03-11-016050-A	3	40	16	32	50	0,3	A	14,0	29 000	0,4~3,2	◈
181083400	050A76090-04-11-022050-A	4	50	22	42	50	0,4	A	14,0	24 000	0,4~3,2	◈
181085300	063A76090-05-11-022050-A	5	63	22	48	50	0,7	A	14,0	21 000	0,4~3,2	◈
181094300	080A76090-05-11-027050-A	5	80	27	60	50	1,1	A	14,0	19 000	0,4~3,2	◈
181094400	100A76090-06-11-032063-A	6	100	32	73	63	2,0	A	14,0	16 000	0,4~3,2	◈
181094500	040A76090-03-11-016050-B	3	40	16	32	50	0,3	B	14,0	29 000	4,0~5,0	◈
181094600	050A76090-04-11-022050-B	4	50	22	42	50	0,4	B	14,0	24 000	4,0~5,0	◈
181094700	063A76090-05-11-022050-B	5	63	22	48	50	0,7	B	14,0	21 000	4,0~5,0	◈
181094800	080A76090-05-11-027050-B	5	80	27	60	50	1,1	B	14,0	19 000	4,0~5,0	◈
181094900	100A76090-06-11-032063-B	6	100	32	73	63	2,0	B	14,0	16 000	4,0~5,0	◈

◈ Stock item | Produto de stock | Itens de stock

○ Available under request (see page A-6) | Disponível sobre consulta (consulte a página A-6) | Disponible bajo consulta (mire pagina A-6)

SPARE PARTS | Complementos | Repuestos

Order separately

Cutter ØDc	Insert Screw	Key (Torx)	Key (Torx - Nm)	Torque Value
			Nm	Nm
A76090- 40-80	P0400900	XT15	DT1530	3,0
A76090 - 100	P0400900	PT15	DT1530	3,0
E76090 - 20-25	P0400803	XT15	DT1530	3,0
E76090 - 32-40	P0400900	XT15	DT1530	3,0

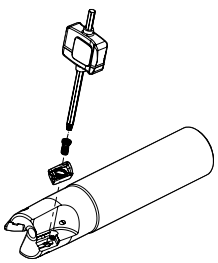

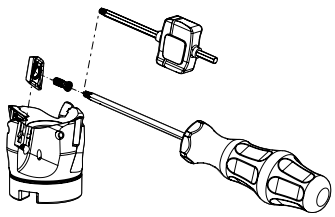

Note: The toolholder is supplied with the XT/PT key. To order the DT key please check the page A-243.
Check the procedures for the clamping screws on the page A-243.

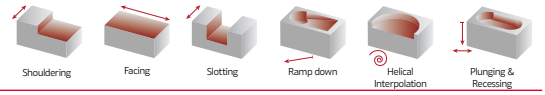



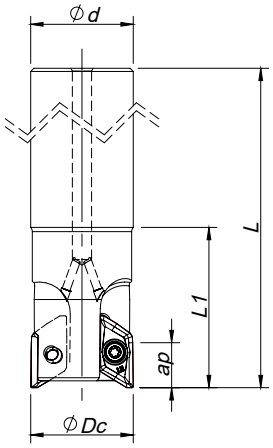

Cylindrical Shank

K_r=90° | γ_p=+6° ~+11°

Order code Código	Reference Referência Referencia		Dimensions | Dimensões | Dimensiones (mm)				Kg	Specifications			Insert radius Raio da pastilha Rayo del Inserto	Stock
			ØDc	Ød	L	L1		Cutter Type	Max ap (mm)	rpm max		
181095000	020E76090-01-06-020150-A	1	20	20	150	60	0,2	A	15,0	40 000	0,4~3,2	◉
181095100	025E76090-02-09-025180-A	2	25	25	180	90	0,4	A	15,0	38 000	0,4~3,2	◉
181095200	032E76090-02-09-032200-A	2	32	32	200	120	0,7	A	15,0	33 000	0,4~3,2	◉
181095300	040E76090-03-11-032250-A	3	40	40	250	65	1,4	A	15,0	29 000	0,4~3,2	◉
181095400	020E76090-01-06-020150-B	1	20	20	150	60	0,2	B	15,0	40 000	4,0~5,0	◉
181095500	025E76090-02-09-025180-B	2	25	25	180	90	0,4	B	15,0	38 000	4,0~5,0	◉
181095600	032E76090-02-09-032200-B	2	32	32	200	120	0,7	B	15,0	33 000	4,0~5,0	○
181095700	040E76090-03-11-032250-B	3	40	40	250	65	1,4	B	15,0	29 000	4,0~5,0	◉

◉ Stock item | Produto de stock | Itens de stock ○ Available under request (see page A-6) | Disponível sobre consulta (consulte a página A-6) | Disponible bajo consulta (mire pagina A-6)

XDGX 15M5... | Inserts | Pastilhas | Plaquitas



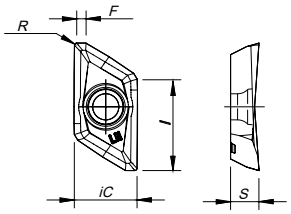

		P					M				K					N		S		H	Dimensions Dimensões Dimensiones (mm)					Cutter Type
		CVD	PVD				CVD	PVD			CVD		PVD			UNC	PCD	PVD		PVD						
	(2) Grade code	T9	P7	G1	G4	P3	R1	G4	P3	G6	L5	L6	G1	P3	G6	10	D6	P3	G6	P7						
(1) Geometry code	ISO Reference	PHS740	PH7603	PH7910	PH7920	PH7930	PHM740	PH7920	PH7930	PH7740	PH5705	PH5320	PH7910	PH7930	PH7740	PH0910	PDP410	PH7930	PH7740	PH7603	iC	S	I	R	F	
1111624	XDGX 15M504 PDFR-LN															◉					11,20	5,00	16,0	0,40	1,50	A
1111625	XDGX 15M508 PDFR-LN															◉					11,20	5,00	16,0	0,80	1,10	A
1111626	XDGX 15M512 PDFR-LN															◉					11,20	5,00	16,0	1,20	0,70	A
1111627	XDGX 15M516 PDFR-LN															◉					11,20	5,00	16,0	1,60	0,40	A
1111628	XDGX 15M520 PDFR-LN															◉					11,20	5,00	16,0	2,00	0,20	A
1112154	XDGX 15M530 PDFR-LN															◉					11,20	5,00	16,0	3,00	0,60	A
1111629	XDGX 15M532 PDFR-LN															◉					11,20	5,00	16,0	3,20	0,60	A
1111630	XDGX 15M540 PDFR-LN															◉					11,20	5,00	16,0	4,00	0,50	B
1111631	XDGX 15M550 PDFR-LN															◉					11,20	5,00	16,0	5,00	0,40	B

◉ First choice | Primeira opção | 1ª opción ◉ Stock item | Produto de stock | Itens de stock ○ Available under request (see page A-7) | Disponível sobre consulta (consulte a página A-7) | Disponible bajo consulta (mire pagina A-7)

Insert order code = (1) Geometry Code + (2) Grade Code

page A-236 page A -244

ALUPRO 76090

RECOMMENDED CUTTING CONDITIONS | Condições de corte recomendadas | Condiciones de corte recomendables

SHOULDERING

ISO	PSM	Material	HB (Brinell)	Vc (m/min) PH0910	Width of Cut ae (mm)	Depth of Cut ap (mm)	Feed fz(mm/t)
N	10	Aluminium and Non Ferrous	30-130	350-3000	≤ 25% ØDc	≤5.0	0,35 - 0,40
						5.0 - 10.0	0,30 - 0,35
						10.0 - 15.0	0,25 - 0,30
					< 50% ØDc	≤5.0	0,35 - 0,40
						5.0 - 10.0	0,30 - 0,35
						10.0 - 15.0	0,25 - 0,30
					≤ 75% ØDc	≤5.0	0,30 - 0,35
						5.0 - 10.0	0,25 - 0,30
						10.0 - 15.0	0,20 - 0,25

SLOTTING

ISO	PSM	Material	HB (Brinell)	Vc (m/min) PH0910	Width of Cut ae (mm)	Depth of Cut ap (mm)	Feed fz(mm/t)
N	10	Aluminium and Non Ferrous	30-130	350-3000	100% ØDc	≤5.0	0,25 - 0,35
						5.0 - 10.0	0,20 - 0,30
						10.0 - 15.0	0,15 - 0,25

(Note 1) Cutting conditions a_e/Dc=70%.

(Note 2) It's possible to occur vibrations in certain cases. Please reduce depth of cut and / or reduce cutting conditions in following cases:
- When using long shank;
- When using long tool overhang with arbor type;
- When application has poor clamping rigidity or when using a low rigidity machine.

(Note 3) Use internal coolant supply

OPERATIONAL GUIDE | Guia operacional | Guía operativa

- The maximum allowable revolutions are shown in Table 1. Ensure that the cutter operates under the maximum allowable revolutions. The maximum allowable revolutions for safety purposes are determined in accordance with ISO 15641 (Milling Cutters for high speed machining–Safety requirements).

Table 1 - Maximum allowable revolutions:

ØDc	Ø20	Ø25	Ø32	Ø40	Ø50	Ø63	Ø80	Ø100
RPM (min^{-1})	40000	38000	33000	29000	24000	21000	19000	16000

- Even when operating under the maximum allowable spindle speed, if the spindle speed is equal or higher than the values shown in Table 2., it is recommended that the balance quality (with the arbor or chuck) according ISO 1940.

Table 2 - Maximum revolutions when balancing with the arbor or chuck has not been achieved:

ØDc	Ø20	Ø25	Ø32	Ø40	Ø50	Ø63	Ø80	Ø100
RPM (min^{-1})	15000	12000	9500	8500	7600	6800	6000	5400

- When setting the spindle speed, take into consideration the maximum allowable revolutions of arbor or chuck.
- Use the specified set bolt when using the arbor type with internal coolant supply.

RAMPING AND HELICAL INTERPOLATION

Descida em rampa e interpolação helicoidal | Bajada en rampa e interpolación circular

Ramping

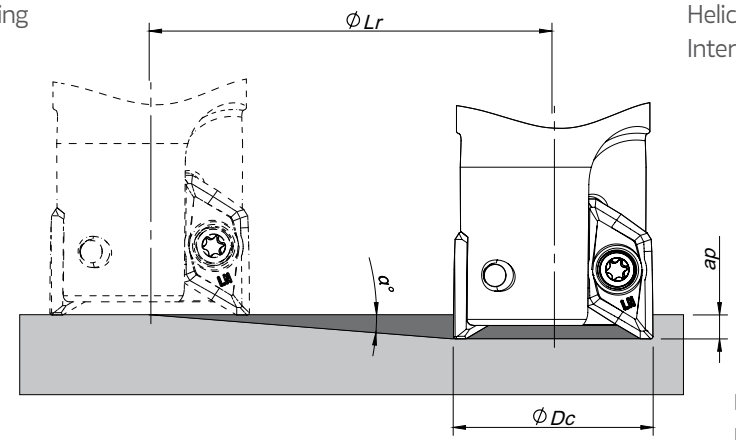

Helical Interpolation

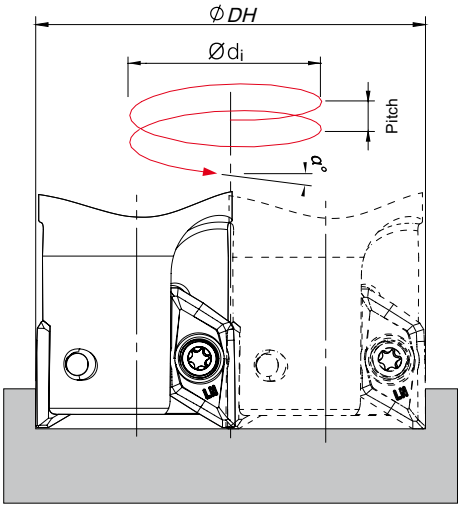

Blind hole
Flat bottom

Ødi = ØDH - ØDc

Cutter Type	ØDc	Ramping			Helical Interpolation		
					Diameter for Blind Hole, Flat Bottom Face (1)		Max Pitch/Rev.
		Max Ramp a°	Max ap	Min Lr	ØDHmin	ØDHmax	
A	20	23	15,0	35,3	36,2 -	- 38,4	21,6 24,5
	25	21	15,0	39,1	46,2 -	- 48,4	25,6 28,2
	32	15	15,0	56,0	60,2 -	- 62,4	23,7 25,6
	40	10	15,0	85,1	76,2 -	- 78,4	20,0 21,3
	50	8	15,0	106,7	96,2 -	- 98,4	20,4 21,4
	63	6	15,0	142,7	122,2 -	- 124,4	19,5 20,3
	80	4	15,0	214,5	156,2 -	- 158,4	16,7 17,2
	100	2,5	15,0	343,6	196,2 -	- 198,4	13,2 13,5
B	20	20	13,5	37,1	36,2 -	- 38,4	18,5 21,0
	25	18,5	13,5	40,3	46,2 -	- 48,4	22,3 24,6
	32	13,5	13,5	56,2	60,2 -	- 62,4	21,3 22,9
	40	8,5	13,5	90,3	76,2 -	- 78,4	17,0 18,0
	50	7	13,5	109,9	96,2 -	- 98,4	17,8 18,7
	63	5,5	13,5	140,2	122,2 -	- 124,4	17,9 18,6
	80	3,5	13,5	220,7	156,2 -	- 158,4	14,6 15,1
	100	2,5	13,5	309,2	196,2 --	- 198,4	13,2 13,5

(1) using insert radius 0,8 mm

Note: During helical interpolation do not exceed maximum pitch.
When using different insert radius to calculate the ØDHmin and ØDHmax use the equation below:
- Minimum Diameter: ØDHmin = 2 x (ØDc - (R corner radius + F width of edge wiper)
- Maximum Diameter: ØDHmax = 2 x (ØDc - R corner radius)

page A-236
page A -244

ALUPRO 77090



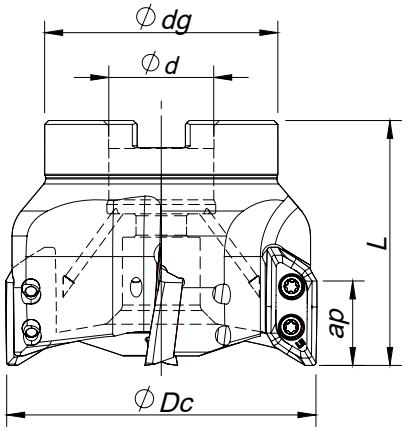

Arbor Mounting
K_r=90° | γ_p=+7°

Order code Código	Reference Referência Referencia		Dimensions | Dimensões | Dimensiones (mm)				Kg	Specifications			Insert radius Raio da pastilha Rayo del Inserto	Stock
			ØDc	Ød	Ødg	L		Cutter Type	Max ap (mm)	rpm max		
181093000	050A77090-03-07-022050-A	3	50	22	42	50	0,4	A	21,5	30 000	0,8~3,2	◈
181093100	063A77090-03-07-022050-A	3	63	22	42	50	0,5	A	21,5	25 000	0,8~3,2	◈
181071600	080A77090-04-07-027063-A	4	80	27	60	63	1,2	A	21,5	23 000	0,8~3,2	◈
181093200	100A77090-05-07-032063-A	5	100	32	70	63	1,8	A	21,5	19 000	0,8~3,2	◈
181093300	125A77090-06-07-040063-A	6	125	40	100	63	2,7	A	21,5	16 000	0,8~3,2	◈
181093400	050A77090-03-07-022050-B	3	50	22	42	50	0,4	B	21,0	30 000	4,0~5,0	◈
181093500	063A77090-03-07-022050-B	3	63	22	42	50	0,5	B	21.0	25 000	4,0~5,0	◈
181093600	080A77090-04-07-027063-B	4	80	27	60	63	1,2	B	21.0	23 000	4,0~5,0	◈
181093700	100A77090-05-07-032063-B	5	100	32	70	63	1,8	B	21.0	19 000	4,0~5,0	◈
181093800	125A77090-06-07-040063-B	6	125	40	100	63	2,7	B	21.0	16 000	4,0~5,0	◈

◈ Stock item | Produto de stock | Itens de stock

◯ Available under request (see page A-6) | Disponível sobre consulta (consulte a página A-6) | Disponible bajo consulta (mire pagina A-6)

SPARE PARTS | Complementos | Repuestos

Cutter ØDc	Insert Screw	Key (Torx)	Order separately Key (Torx - Nm)	Torque Value	Order separately Screw	DIN 6368 Wrench
A77090 - 50-80	P0401200	XT15	DT1530	3,0	-	-
A77090 - 100	P0401200	PT15	DT1530	3,0	J0164110	SD6368-16
A77090 - 125	P0401200	PT15	DT1530	3,0	J0204610	SD6368-20
E77090 - 32-40	P0401200	XT15	DT1530	3,0	-	-

Note: The toolholder is supplied with the XT/PT key. To order the DT key please check the page A-243.
Check the procedures for the clamping screws on the page A-243.

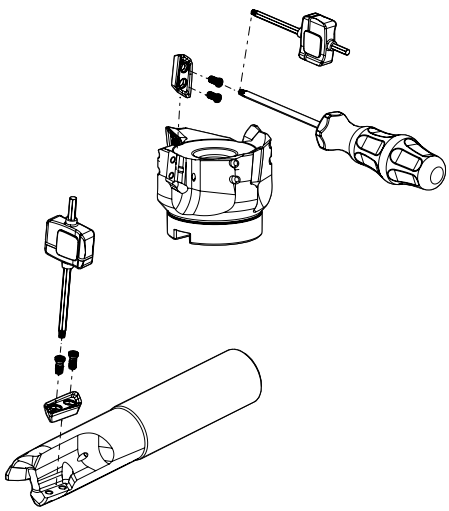

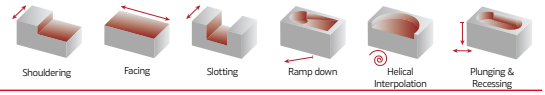



Cylindrical Shank

K_r=90° | γ_p=+6°

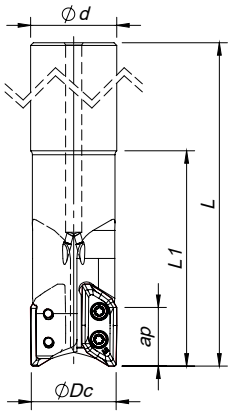

Order code Código	Reference Referência Referencia		Dimensions | Dimensões | Dimensiones (mm)				Kg	Specifications			Insert radius Raio da pastilha Rayo del Inserto	Stock
			ØDc	Ød	L	L1		Cutter Type	Max ap (mm)	rpm max		
181069800	032E77090-02-06-032170-A	2	32	32	170	80	0,8	A	21.5	41 000	0,8~3,2	●
181093900	040E77090-02-06-040170-A	2	40	40	170	80	0,9	A	21.5	36 000	0,8~3,2	●
181094000	032E77090-02-06-032170-B	2	32	32	170	80	0,8	B	21.0	41 000	4,0~5,0	○
181094100	040E77090-02-06-040170-B	2	40	40	170	80	0,9	B	21.0	36 000	4,0~5,0	●

● Stock item | Produto de stock | Itens de stock ○ Available under request (see page A-6) | Disponível sobre consulta (consulte a página A-6) | Disponible bajo consulta (mire pagina A-6)

XDGX 22M7... ‖ Inserts | Pastilhas | Plaquitas

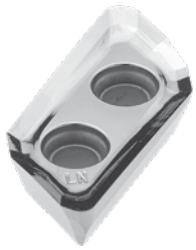

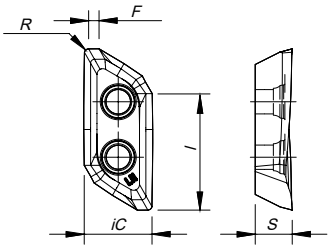

		P					M				K					N		S		H	Dimensions Dimensões Dimensiones (mm)					Cutter Type
		CVD	PVD				CVD	PVD			CVD		PVD			UNC	PCD	PVD		PVD						
	(2) Grade code	T9	P7	G1	G4	P3	R1	G4	P3	G6	L5	L6	G1	G4	G6	10	D6	P3	G6	P7						
(1) Geometry code	ISO Reference	PHS740	PH7603	PH7910	PH7920	PH7930	PHM740	PH7920	PH7930	PH7740	PH5705	PH5320	PH7910	PH7920	PH7740	PH0910	PDP410	PH7930	PH7740	PH7603	iC	S	l	R	F	
1111618	XDGX 22M708 PDFR-LN															◉					13,00	7,00	22,0	0,80	2,00	A
1111619	XDGX 22M716 PDFR-LN															◉					13,00	7,00	22,0	1,60	1,20	A
1111620	XDGX 22M720 PDFR-LN															◉					13,00	7,00	22,0	2,00	0,80	A
1111621	XDGX 22M732 PDFR-LN															◉					13,00	7,00	22,0	3,20	0,60	A
1111622	XDGX 22M740 PDFR-LN															◉					13,00	7,00	22,0	4,00	0,90	B
1111623	XDGX 22M750 PDFR-LN															◉					13,00	7,00	22,0	5,00	0,40	B

◉ First choice | Primeira opção | 1ª opción ● Stock item | Produto de stock | Itens de stock ○ Available under request (see page A-7) | Disponível sobre consulta (consulte a página A-7) | Disponible bajo consulta (mire pagina A-7)

Insert order code = (1) Geometry Code + (2) Grade Code

page A-236 page A -244

ALUPRO 77090

RECOMMENDED CUTTING CONDITIONS | Condições de corte recomendadas | Condiciones de corte recomendables

SHOULDERING

ISO	PSM	Material	HB (Brinell)	Vc (m/min) PH0910	Width of Cut ae (mm)	Depth of Cut ap (mm)	Feed fz(mm/t)
N	10	Aluminium and Non Ferrous	30-130	350-3000	≤ 25% ØDc	≤5.0	0,35 - 0,40
						5.0 - 10.0	0,30 - 0,35
						10.0 - 15.0	0,25 - 0,30
						15.0 - 20.0	0,20 - 0,25
					< 50% ØDc	≤5.0	0,35 - 0,40
						5.0 - 10.0	0,30 - 0,35
						10.0 - 15.0	0,25 - 0,30
						15.0 - 20.0	0,20 - 0,25
					≤ 75% ØDc	≤5.0	0,30 - 0,35
						5.0 - 10.0	0,25 - 0,30
						10.0 - 15.0	0,20 - 0,25
						15.0 - 20.0	0,15 - 0,20

SLOTTING

ISO	PSM	Material	HB (Brinell)	Vc (m/min) PH0910	Width of Cut ae (mm)	Depth of Cut ap (mm)	Feed fz(mm/t)
N	10	Aluminium and Non Ferrous	30-130	350-3000	100% ØDc	≤5.0	0,25 - 0,35
						5.0 - 10.0	0,20 - 0,30
						10.0 - 15.0	0,15 - 0,25
						15.0 - 20.0	0,10 - 0,20

(Note 1) Cutting conditions a_e/Dc=70%.
(Note 2) It's possible to occur vibrations in certain cases. Please reduce depth of cut and / or reduce cutting conditions in following cases:
- When using long shank;
- When using long tool overhang with arbor type;
- When application has poor clamping rigidity or when using a low rigidity machine.

(Note 3) Use internal coolant supply.

OPERATIONAL GUIDE | Guia operacional | Guía operativa

- Only use the inserts and parts provided by Palbit with this tool. Use of the correct insert clamp screws is especially important to ensure overall tool safety. Do not use damaged or worn clamp screws.
- When tightening the clamp screws, follow the order in Figure 1. The recommended torque value is 3.5Nm.
- The maximum allowable revolutions are shown in Table 1. Ensure that the cutter operates under the maximum allowable revolutions.

The maximum allowable revolutions for safety purposes are determined in accordance with ISO 15641 (Milling Cutters for high speed machining–Safety requirements).

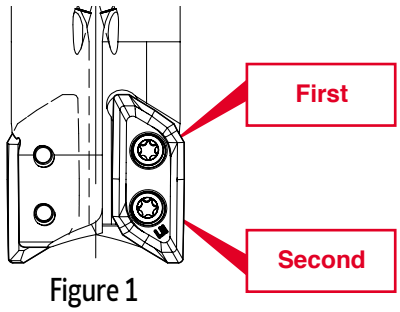

Figure 1

Table 1 - Maximum allowable revolutions:

ØDc	Ø32	Ø40	Ø50	Ø63	Ø80	Ø100	Ø125
RPM (min^{-1})	41000	36000	30000	25000	23000	19000	16000

- Even when operating under the maximum allowable spindle speed, if the spindle speed is equal or higher than the values shown in Table 2., it is recommended that the balance quality (with the arbor or chuck) according ISO 1940.

Table 2 - Maximum revolutions when balancing with the arbor or chuck has not been achieved:

ØDc	Ø32	Ø40	Ø50	Ø63	Ø80	Ø100	Ø125
RPM (min^{-1})	9500	7600	6000	4800	3800	3000	2400

- When setting the spindle speed, take into consideration the maximum allowable revolutions of arbor or chuck.
- Use the specified set bolt when using the arbor type with internal coolant supply.

RAMPING AND HELICAL INTERPOLATION

Descida em rampa e interpolação helicoidal | Bajada en rampa e interpolación circular

Ramping

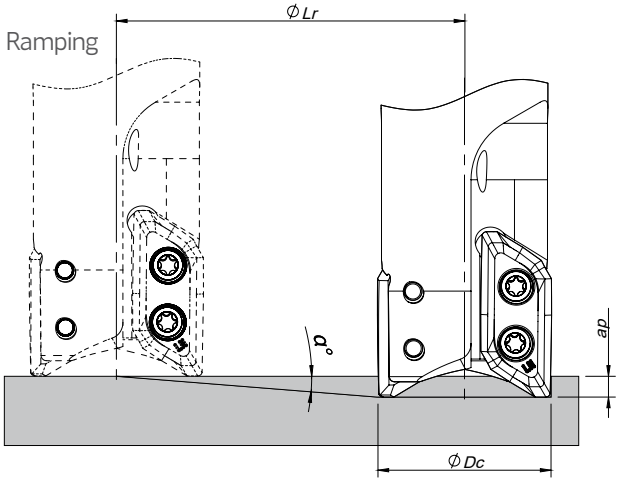

Helical Interpolation

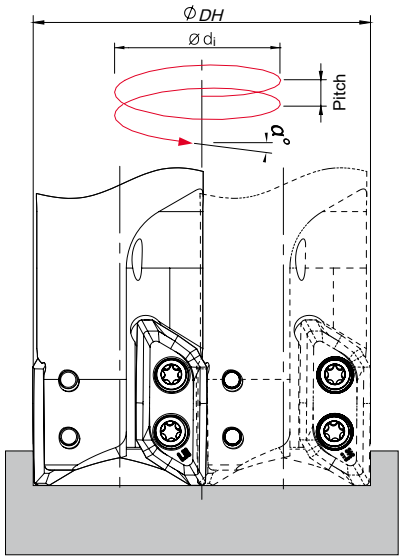

Blind hole
Flat bottom

Ødi = ØDH - ØDc

Cutter Type	ØDc	Ramping			Helical Interpolation		
					Diameter for Blind Hole, Flat Bottom Face (1)		Max Pitch/Rev.
		Max Ramp a°	Max a_p	Min Lr	ØDHmin	ØDHmax	
A	32	19	21,5	62,4	60,0 -	- 62,4	30,3 32,9
	40	13	21,5	93,1	76,0 -	- 78,4	26,1 27,8
	50	9	21,5	135,7	96,0 -	- 98,4	22,9 24,1
	63	7	21,5	175,1	122,0 -	- 124,4	22,7 23,7
	80	5	21,5	245,7	156,0 -	- 158,4	20,9 21,5
	100	4	21,5	307,5	196,0 -	- 198,4	21,1 21,6
	125	3	21,5	410,2	246,0 -	- 248,4	19,9 20,3
B	32	18	21,0	64,6	60,0 -	- 62,4	28,6 31,0
	40	11	21,0	108,0	76,0 -	- 78,4	22,0 23,4
	50	8	21,0	149,4	96,0 -	- 98,4	20,3 21,4
	63	6	21,0	199,8	122,0 -	- 124,4	19,5 20,3
	80	4	21,0	300,3	156,0 -	- 158,4	16,7 17,2
	100	3	21,0	400,7	196,0 -	- 198,4	15,8 16,2
	125	2	21,0	601,4	246,0 -	- 248,4	13,3 13,5

(1) using insert radius 0,8 mm
Note: During helical interpolation do not exceed maximum pitch.
When using different insert radius to calculate the ØDHmin and ØDHmax use the equation below:
- Minimum Diameter: ØDHmin = 2 x (ØDc - (R corner radius + F width of edge wiper)
- Maximum Diameter: ØDHmax = 2 x (ØDc - R corner radius)

page A-236
page A -244

ALUPRO 08390



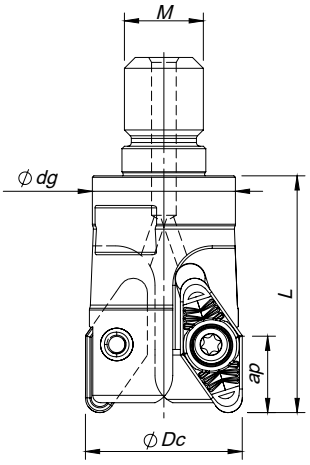

Threaded Coupling

K_r=90° | γ_p=0°

Order code Código	Reference Referência Referencia		Dimensions | Dimensões | Dimensiones (mm)				Kg	Specifications	Insert Pastilha Inserto	Stock
			ØDc	Ød/M	Ødg	L		Ap max (mm)		
181019900	032R08390-02-M16048	2	32	M16	29	48	0,19	15,00	VCGX 22...	

Stock item | Produto de stock | Itens de stock

Available under request (see page A-6) | Disponível sobre consulta (consulte a página A-6) | Disponible bajo consulta (mire pagina A-6)

VCGX 220530 ‖ Inserts | Pastilhas | Plaquitas



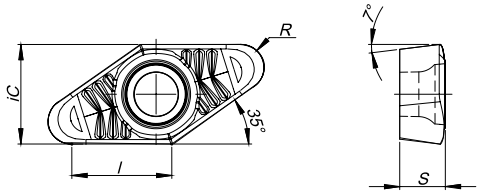

		P						M				K						N		S		H	Dimensions Dimensões Dimensiones (mm)				
		CVD	PVD					CVD	PVD			CVD			PVD			UNC	PCD	PVD		PVD					
	(2) Grade code	T9	P7	G1	G4	P3	G6	R1	G4	P3	G6	L5	L6	L9	G1	G4	P3	10	D6	P3	G6	P7					
(1) Geometry code	ISO Reference	PHS740	PH7603	PH7910	PH7920	PH7930	PH7740	PHM740	PH7920	PH7930	PH7740	PH5705	PH5320	PH5740	PH7910	PH7920	PH7930	PH0910	PDP410	PH7930	PH7740	PH7603	iC	S	l	R	F
1121907	VCGX 220530 LN																						12,70	5,60	12,7	3,00	-

First choice | Primeira opção | 1ª opción

Stock item | Produto de stock | Itens de stock

Available under request (see page A-7) | Disponível sobre consulta (consulte a página A-7) | Disponible bajo consulta (mire pagina A-7)

Insert order code = (1) Geometry Code + (2) Grade Code

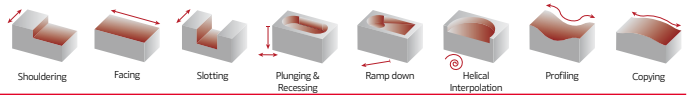

SPARE PARTS | Complementos | Repuestos

Order separately

Cutter ØDc	Insert Screw	Key (Torx)	Key (Torx - Nm)	Torque Value
R08390 – 32	P0451001	XT20	DT2050	5,00

Note: The toolholder is supplied with the XT/PT key. To order the DT key please check the page A-243.
Check the procedures for the clamping screws on the page A-243.

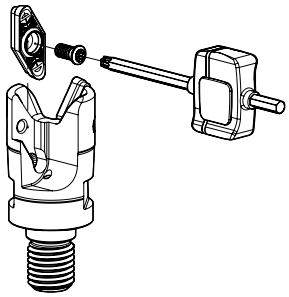

RECOMMENDED CUTTING CONDITIONS | Condições de corte recomendadas | Condiciones de corte recomendables

ISO	PSM	Material	HB (Brinell)	Vc (m/min)	Feed fz(mm/t)
				PH0910	VCGX 22...
N	10	Aluminium and Non Ferrous	30-130	350-1400	0,20-0,50

ØDc	Ø32
RPM (min^{-1})	9500

(Note 1) Cutting conditions a_e/Dc=70%.
(Note 2) It's possible to occur vibrations in certain cases. Please reduce depth of cut and / or reduce cutting conditions in following cases:
- When using long shank;
- When using long tool overhang with arbor type;
- When application has poor clamping rigidity or when using a low rigidity machine.

(Note 3) Use internal coolant supply

RAMPING AND HELICAL INTERPOLATION

Descida em rampa e interpolação helicoidal | Bajada en rampa e interpolación circular

Ramping

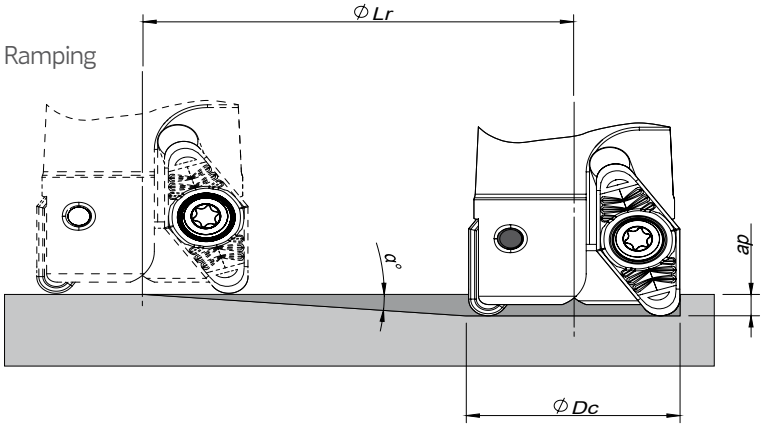

Helical Interpolation

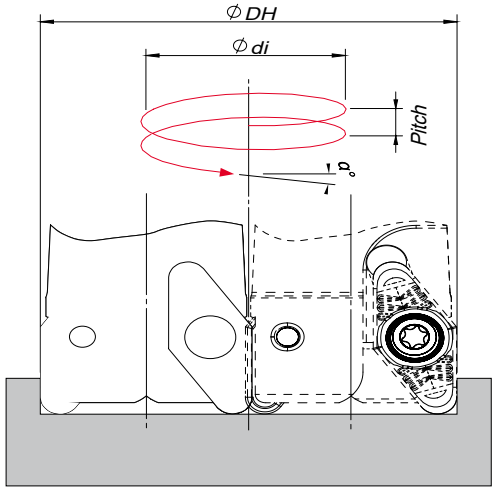

Blind hole
Flat bottom

Ødi = ØDH - ØDc

ØDc	Ramping			Helical Interpolation		
	Max Ramp a°	Max a_p	Min Lr	ØDHmin	ØDHmax	Max Pitch/Rev.
35	6,8	15,0	25,4	53,0 -	- 62,0	7,0 11,0

Note: During helical interpolation do not exceed max Pitch.

LINEPRO 06290



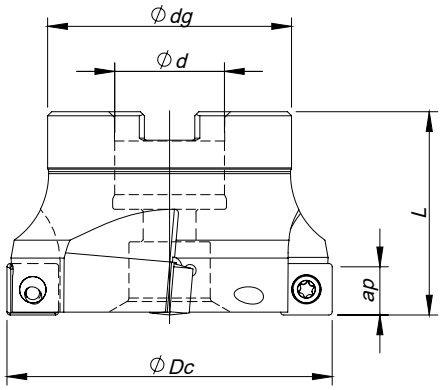

Arbor Mounting

κ_r=90° | γ_p=+6°

Order code Código	Reference Referência Referencia		Dimensions | Dimensões | Dimensiones (mm)				Kg	Specifications		Insert Pastilha Inserto	Stock
			ØDc	Ød	Ødg	L		Arbor Type	Ap max (mm)		
181065100	040A06290-03-06-U016040	3	40	16	39	40	0,200	A	11,0	SP... 1204	○
181065200	050A06290-04-06-U022040	4	50	22	49	40	0,350	A	11,0	SP... 1204	◈
181065300	063A06290-05-06-U027050	5	63	27	60	50	0,700	A	11,0	SP... 1204	◈
181052600	080A06290-06-06-U027050	6	80	27	64	50	1,150	A	11,0	SP... 1204	◈
181065400	100A06290-08-06-U032050	8	100	32	78	50	1,750	A	11,0	SP... 1204	○
181065500	125A06290-08-06-U040063	8	125	40	96	63	3,050	B	11,0	SP... 1204	○
181065600	160A06290-10-06-U040063	10	160	40	100	63	4,200	C	11,0	SP... 1204	○

◈ Stock item | Produto de stock | Itens de stock

○ Available under request (see page A-6) | Disponível sobre consulta (consulte a página A-6) | Disponible bajo consulta (mire pagina A-6)

SP... 1204... | Inserts | Pastilhas | Plaquitas

SPMT - MP



SPMW



SPMT-MP | SPMW

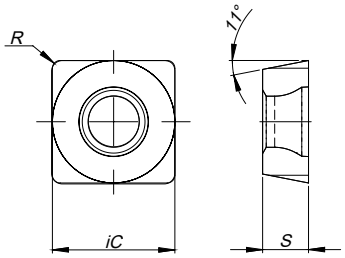

		P						M			K						N		S		H	Dimensions Dimensões Dimensiones (mm)					
		CVD	PVD					CVD	PVD		CVD		PVD				UNC	PCD	PVD		PVD						
	(2) Grade code	T9	P7	54	68	66	I5	R1	66	I5	L5	L6	54	68	66	I5	10	D6	66	I5	P7						
(1) Geometry code	ISO Reference	PHS740	PH7603	PH6910	PH6920	PH6930	PH6740	PHM740	PH6930	PH6740	PH5705	PH5320	PH6910	PH6920	PH6930	PH6740	PH0910	PDP410	PH6930	PH6740	PH7603	iC	S	I	R	B	F
1111609	SPMT 120408-MP				◈		◈			◈				◈		◈				◈		12,70	4,76	-	0,8	-	-
1120572	SPMW 120408				○		◈			◈				○		◈						12,70	4,76	-	0,8	-	-

First choice | Primeira opção | 1ª opción

◈ Stock item | Produto de stock | Itens de stock

○ Available under request (see page A-7) | Disponível sobre consulta (consulte a página A-7) | Disponible bajo consulta (mire pagina A-7)

Insert order code = (1) Geometry Code + (2) Grade Code

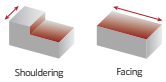

SPARE PARTS | Complementos | Repuestos

Order separately

Cutter ØDc	Insert Screw	Key (Torx)	Key (Torx - Nm)	Torque Value
A06290 – 40 - 160	P0501100	PT20	DT2050	5,00

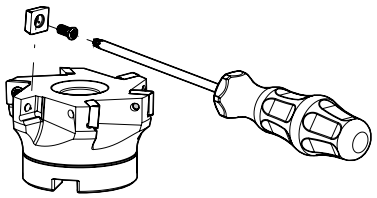

Note: The toolholder is supplied with the XT/PT key. To order the DT key please check the page A-243.
Check the procedures for the clamping screws on the page A-243.

GRADES SELECTION GUIDE | Guia para selecção de graus | Tabla para selección de calidades

ISO	PSM	Material	HB (Brinell)	Grades ← Wear Resistance	Toughness →
				PH6920	PH6740
P	1	Unalloyed steel	125-220	✓	✓
	2	Low-alloyed steel	220-280	✓	✓
	3	High-alloy steel	280-380	✓	✓
M	4	SS - Ferritic / Martensitic	200-330		✓
	5	SS - Austenitic	200-330		✓
	6	SS - Austenitic-ferritic (Duplex)	230-260		✓
K	7	Malleable cast iron	130-230	✓	✓
	8	Grey cast iron	180-245	✓	✓
	9	Nodular cast iron	160-250	✓	✓
S	11	Heat Resistant Super Alloys	200-320		✓

Good Conditions
Average Conditions
Difficult Conditions

RECOMMENDED CUTTING CONDITIONS | Condições de corte recomendadas | Condiciones de corte recomendables

ISO	PSM	Material	HB (Brinell)	Vc (m/min) ← Wear Resistance	Toughness →	Feed fz (mm/t)	
				PH6920	PH6740	SPMT ... MP	SPMW ...
P	1	Unalloyed Steel	125-220	150-230	130-160	0,08-0,20	0,10-0,20
	2	Low-Alloyed Steel	220-280	140-220	120-150	0,08-0,20	0,10-0,20
	3	High-Alloyed Steel	280-380	130-180	100-130	0,08-0,15	0,10-0,20
M	4	SS - Ferritic / Martensitic	200-330	-	100-120	0,08-0,15	0,10-0,20
	5	SS - Austenitic	200-330	-	80-110	0,08-0,15	0,10-0,20
	6	SS - Austenitic-ferritic (Duplex)	230-260	-	70-100	-	0,10-0,20
K	7	Malleable Cast Iron	130-230	150-280	130-250	0,08-0,25	0,10-0,30
	8	Grey Cast Iron	180-245	130-230	110-220	0,08-0,25	0,10-0,30
	9	Nodular Cast iron	160-250	80-190	80-170	0,08-0,25	0,10-0,30
S	11	Heat Resistant Super Alloys	200-320	-	20-80	0,08-0,15	-

(Note 1) Cutting conditions ae/DC=70%
(Note 2) Cutting conditions should be ajusted according to the machine and work rigidity.
(Note 3) If chattering occurs, reduce ap and Vc by 30% and keep the same fz per tooth.

CHIP-BREAKER SELECTION GUIDE | Guia para aplicações do quebra-aparas | Guía para aplicación del rompevirutas

ISO	PSM	Material	HB (Brinell)	Chip-Breaker Application	
				1st choise	Dificult Operations
P	1	Unalloyed Steel	125-220	SPMT ... MP	SPMW ...
	2	Low-Alloyed Steel	220-280	SPMT ... MP	SPMW ...
	3	High-Alloyed Steel	280-380	SPMT ... MP	SPMW ...
M	4	SS - Ferritic / Martensitic	200-330	SPMT ... MP	SPMW...
	5	SS - Austenitic	200-330	SPMT ... MP	SPMW ...
	6	SS - Austenitic-ferritic (Duplex)	230-260	SPMW ...	-
K	7	Malleable Cast Iron	130-230	SPMT ... MP	SPMW ...
	8	Grey Cast Iron	180-245	SPMT ... MP	SPMW ...
	9	Nodular Cast iron	160-250	SPMW ...	-
S	11	Heat Resistant Super Alloys	200-320	SPMT ... MP	-

page A-236
page A -244

LINEPRO 17090



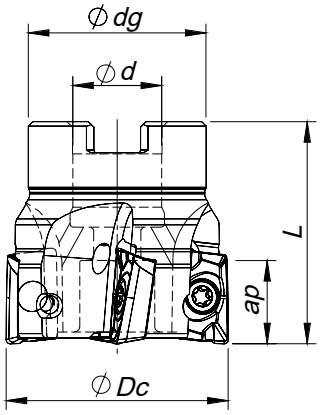

Arbor Mounting

K_r=90° | γ_p=+9°

Order code Código	Reference Referência Referencia		Dimensions | Dimensões | Dimensiones (mm)				Kg	Specifications		Insert Pastilha Inserto	Stock
			ØDc	Ød/M	Ødg	L		Arbor Type	Ap max (mm)		
181010200	040A17090-06-09-022040	6	40	22	39	40	0,210	A	9,0	AP... 1003...	◎
181010300	050A17090-07-09-022040	7	50	22	40	40	0,320	A	9,0	AP... 1003...	◎
181014300	063A17090-08-09-022040	8	63	22	48	40	0,560	A	9,0	AP... 1003...	◎

◎ Stock item | Produto de stock | Itens de stock ○ Available under request (see page A-6) | Disponível sobre consulta (consulte a página A-6) | Disponible bajo consulta (mire pagina A-6)



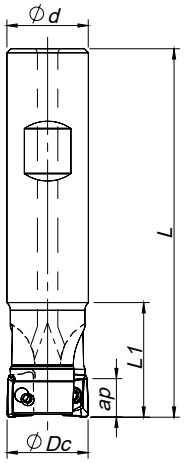

Weldon Shank

K_r=90° | γ_p=+7° ~+9°

Order code Código	Reference Referência Referencia		Dimensions | Dimensões | Dimensiones (mm)				Kg	Specifications	Insert Pastilha Inserto	Stock
			ØDc	Ød/M	L	L1		Ap max (mm)		
181041300	016W17090-02-07-016085	2	16	16	85	26	0,110	9,0	AP... 1003...	◎
181031700	016W17090-02-07-016150	2	16	16	150	26	0,210	9,0	AP... 1003...	◎
181041400	020W17090-03-09-020090	3	20	20	90	28	0,190	9,0	AP... 1003...	◎
181041600	020W17090-03-09-020150	3	20	20	150	28	0,320	9,0	AP... 1003...	◎
181041700	025W17090-04-09-020150	4	25	20	150	26	0,340	9,0	AP... 1003...	◎
181041500	025W17090-04-09-025095	4	25	25	95	30	0,310	9,0	AP... 1003...	◎

◎ Stock item | Produto de stock | Itens de stock ○ Available under request (see page A-6) | Disponível sobre consulta (consulte a página A-6) | Disponible bajo consulta (mire pagina A-6)





Threaded Coupling

κ_r=90° | γ_p=+7° ~+9°

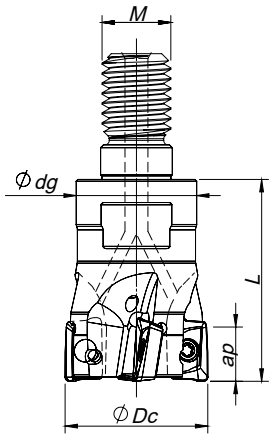

Order code Código	Reference Referência Referencia		Dimensions | Dimensões | Dimensiones (mm)				Kg	Specifications	Insert Pastilha Inserto	Stock
			ØDc	Ød/M	Ødg	L		Ap max (mm)		
181015100	016R17090-02-07-M08025	2	16	M8	13	25	0,030	9,0	AP... 1003...	◈
181015200	020R17090-03-09-M10030	3	20	M10	18	30	0,058	9,0	AP... 1003...	◈
181015300	025R17090-04-09-M12035	4	25	M12	21	35	0,110	9,0	AP... 1003...	◈

◈ Stock item | Produto de stock | Itens de stock ◯ Available under request (see page A-6) | Disponível sobre consulta (consulte a página A-6) | Disponible bajo consulta (mire pagina A-6)

AP... 1003... | Inserts | Pastilhas | Plaquitas

APET - LN

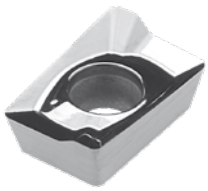

APKT - X

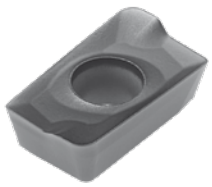

APKT - X1

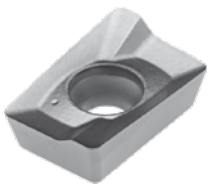

APET-LN | APKT-X | APKT-X1

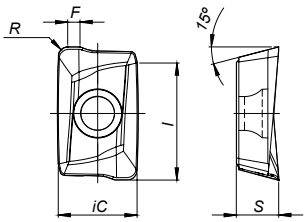

		P						M			K						N		S		H	Dimensions Dimensões Dimensiones (mm)					
		CVD	PVD					CVD	PVD		CVD		PVD				UNC	PCD	PVD		PVD					
	(2) Grade code	T9	P7	54	68	66	I5	R1	68	66	L5	L6	54	68	66	I5	10	D6	66	I5	P7					
(1) Geometry code	ISO Reference	PHS740	PH7603	PH6910	PH6920	PH6930	PH6740	PHM740	PH6920	PH6930	PH5705	PH5320	PH6910	PH6920	PH6930	PH6740	PH0910	PDP410	PH6930	PH6740	PH7603	iC	S	l	R	B	F
1112043	APET 100305 PDFR-LN																◈					6,70	3,50	10,00	0,50	-	1,20
1112168	APKT 100305 PDER-X1				◈	◯				◈				◈	◯							6,70	3,50	10,00	0,50	-	1,20
1112167	APKT 100305 PDSR-X1				◈	◯								◈	◯							6,70	3,50	10,00	0,50	-	1,20
1111071	APKT 100308 PDER-X				◈	◯				◈				◈	◯							6,70	3,50	10,00	0,80	-	0,90
1111044	APKT 100308 PDSR-X				◈									◈								6,70	3,50	10,00	0,80	-	0,90
1111042	APKT 100308 PDTR-X				◈	◯								◈	◯							6,70	3,50	10,00	0,80	-	0,90
1111072	APKT 100312 PDER-X				◈	◯				◈				◈	◯							6,70	3,50	10,00	1,20	-	-
1110987	APKT 100312 PDSR-X				◈									◈								6,70	3,50	10,00	1,20	-	-
1111045	APKT 100312 PDTR-X				◈	◯								◈	◯							6,70	3,50	10,00	1,20	-	-

◈ First choice | Primeira opção | 1ª opción ◈ Stock item | Produto de stock | Itens de stock ◯ Available under request (see page A-7) | Disponível sobre consulta (consulte a página A-7) | Disponible bajo consulta (mire pagina A-7)

Insert order code = (1) Geometry Code + (2) Grade Code

page A-236 page A -244

LINEPRO 17090

SPARE PARTS | Complementos | Repuestos

Cutter ØDc	Insert Screw	Key (Torx)	Key (Torx - Nm) (Order separately)	Torque Value
				
W17090 - 16-25	P0250503	XT08	DT0812	1,2
R17090 - 16-25	P0250503	XT08	DT0812	1,2
A17090 - 40-63	P0250503	XT08	DT0812	1,2

Note: The toolholder is supplied with the XT/PT key. To order the DT key please check the page A-243.
Check the procedures for the clamping screws on the page A-243.

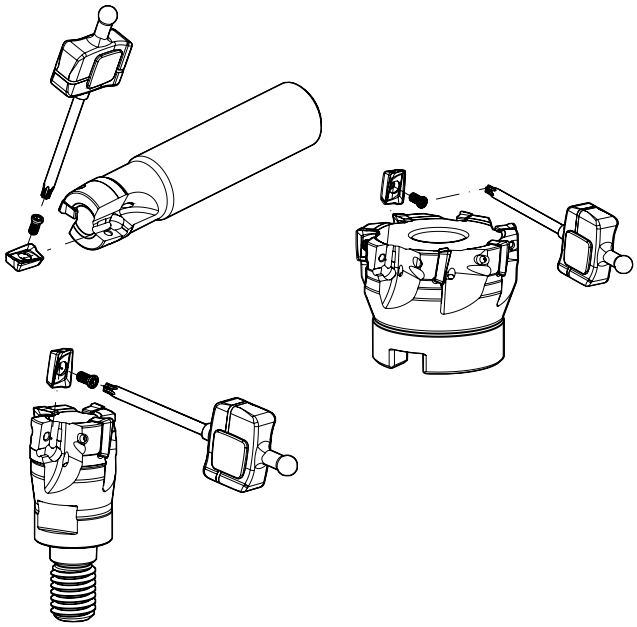

GRADES SELECTION GUIDE | Guia para selecção de graus | Tabla para selección de calidades

ISO	PSM	Material	HB (Brinell)	Grades ← Wear Resistance / Toughness → PH0910	PH6920	PH6930
P	1	Unalloyed Steel	125-220		✓	✓
	2	Low-Alloyed Steel	220-280		✓	✓
	3	High-Alloyed Steel	280-380		✓	✓
M	4	SS - Ferritic / Martensitic	200-330			✓
	5	SS - Austenitic	200-330			✓
	6	SS - Austenitic-ferritic (Duplex)	230-260			✓
K	7	Malleable Cast Iron	130-230		✓	✓
	8	Grey Cast Iron	180-245		✓	✓
	9	Nodular Cast iron	160-250		✓	✓
N	10	Aluminium and Non Ferrous	30-130	✓		

● Good Conditions
◐ Average Conditions
✹ Difficult Conditions

CHIP-BREAKER SELECTION GUIDE | Guia para aplicações do quebra-aparas | Guía para aplicación del rompevirutas

ISO	PSM	Material	HB (Brinell)	Chip-Breaker Application	
				1st choise	Dificult Operations
P	1	Unalloyed Steel	125-220	APKT 10... PDER-X	APKT 10... PDTR-X
	2	Low-Alloyed Steel	220-280	APKT 10... PDSR-X	APKT 10... PDSR-X
	3	High-Alloyed Steel	280-380	APKT 10... PDSR-X	-
M	4	SS - Ferritic / Martensitic	200-330	APKT 10... PDER-X	-
	5	SS - Austenitic	200-330	APKT 10... PDER-X	-
	6	SS - Austenitic-ferritic (Duplex)	230-260	APKT 10... PDER-X	-
K	7	Malleable Cast Iron	130-230	APKT 10... PDER-X	APKT 10... PDSR-X
	8	Grey Cast Iron	180-245	APKT 10... PDSR-X	-
	9	Nodular Cast iron	160-250	APKT 10... PDSR-X	-
N	10	Aluminium and Non Ferrous	30-130	APET 10... PDFR-LN	-

RAMPING AND HELICAL INTERPOLATION

Descida em rampa e interpolação helicoidal | Bajada en rampa e interpolación circular

Ramping

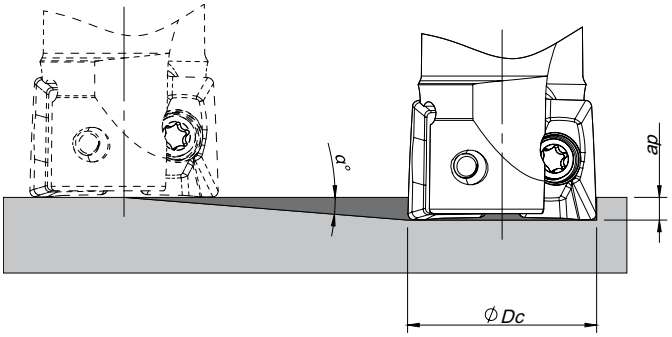

Helical Interpolation

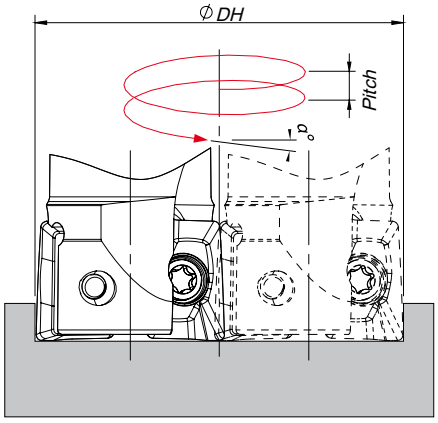

Ødi = ØDH - ØDc

ØDc	Ramping			Helical Interpolation		
				Diameter for Blind Hole, Flat Bottom Face (1)		Max Pitch/Rev.
	Max Ramp a°	Max a_p	Min Lr	ØDHmin	ØDHmax	
16	1,3	9,0	396,6	29,2 -	- 31,0	0,9 1,1
20	0,9	9,0	572,9	37,2 -	- 39,0	0,8 0,9
25	0,6	9,0	859,4	47,2 -	- 49,0	0,7 0,8
40	0,4	9,0	1289,1	77,2 -	- 79,0	0,8 0,9
50	0,25	9,0	2062,6	97,2 -	- 99,0	0,6 0,7
63	0,2	9,0	2578,3	123,2 -	- 125,0	0,7 0,7

(1) using LP insert with radius 0,8 mm
Note: During helical interpolation do not exceed maximum pitch
When using HF insert or other different insert radius to calculate the ØDHmin and ØDHmax use the equation below:
- Minimum Diameter: ØDHmin = 2 x (ØDc - (R corner radius + F width of edge wiper))
- Maximum Diameter: ØDHmax = 2 x (ØDc - R corner radius)

page A-236
page A -244

RECOMMENDED CUTTING CONDITIONS | Condições de corte recomendadas | Condiciones de corte recomendables

ISO	PSM	Material	HB (Brinell)	Vc (m/min) ← Wear Resistance		Toughness →
				PH0910	PH6920	PH6930
P	1	Unalloyed Steel	125-220	-	150-230	150-180
	2	Low-Alloyed Steel	220-280	-	140-220	140-170
	3	High-Alloyed Steel	280-380	-	130-180	120-150
M	4	SS - Ferritic / Martensitic	200-330	-	-	90-150
	5	SS - Austenitic	200-330	-	-	80-130
	6	SS - Austenitic-ferritic (Duplex)	230-260	-	-	70-100
K	7	Malleable Cast Iron	130-230	-	150-280	80-230
	8	Grey Cast Iron	180-245	-	130-230	120-225
	9	Nodular Cast iron	160-250	-	80-190	80-180
N	10	Aluminium and Non Ferrous	30-130	350-1400	-	-

(Note 1) Cutting conditions a_e/Dc=70%.
(Note 2) Cutting conditions for slotting and shouldering operations:

Operation	a_e	Vc & fz	a_p (mm)
Slotting	100%	<20%	3,0-4,0
Shouldering	<50%	>8%	5,0-6,0
	≤25%	>12%	7,0-8,0

(Note 3) Cutting conditions should be adjusted according to the machine and work rigidity.
(Note 4) It's possible to occur vibrations in certain cases. Please reduce depth of cut and / or reduce cutting conditions in following cases:
- When using long shank;
- When using long tool overhang with arbor type;
- When application has poor clamping rigidity or when using a low rigidity machine.

(Note 5) If chattering occurs, reduce ap and Vc by 30% and keep the same fz per tooth.

Feed fz (mm/t)		
APKT 10... PDER-X/X1	APKT 10... PDS(T)R-X/X1	APET 10... PDFR-LN
0,07-0,15	0,10-0,25	-
0,07-0,10	0,10-0,20	-
0,07-0,10	0,10-0,20	-
0,07-0,10	0,10-0,20	-
0,07-0,10	0,10-0,20	-
0,07-0,10	0,10-0,20	-
0,07-0,15	0,10-0,25	-
0,07-0,15	0,10-0,25	-
-	0,10-0,20	-
-	-	0,07-0,20

page A-236
page A -244

LINEPRO 18090

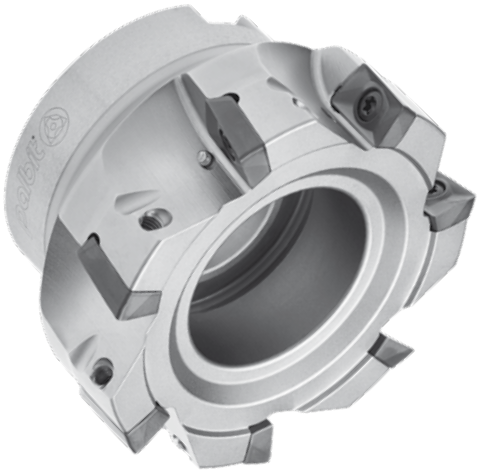

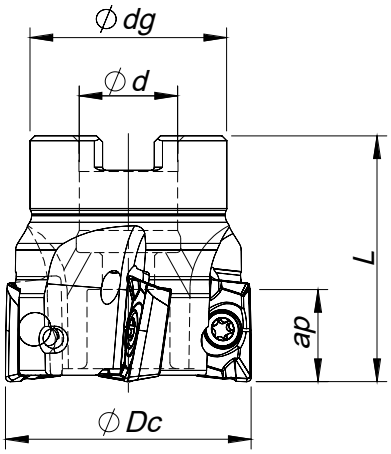

Arbor Mounting

K_r=90° | γ_p=+8° ~+10°

Order code Código	Reference Referência Referencia		Dimensions | Dimensões | Dimensiones (mm)				Kg	Specifications		Insert Pastilha Inserto	Stock
			ØDc	Ød	Ødg	L		Arbor Type	Ap max (mm)		
181031200	040A18090-04-08-016040	4	40	16	32	40	0,180	A	14,5	AP... 1604	
181030900	050A18090-05-08-022040	5	50	22	42	40	0,290	A	14,5	AP... 1604	
181031300	063A18090-06-09-022040	6	63	22	52	40	0,530	A	14,5	AP... 1604	
181031400	080A18090-07-10-027050	7	80	27	60	50	0,920	B	14,5	AP... 1604	
181031500	100A18090-08-10-032050	8	100	32	80	50	1,680	B	14,5	AP... 1604	
181031600	125A18090-09-10-040063	9	125	40	90	63	3,010	B	14,5	AP... 1604	

Stock item | Produto de stock | Itens de stock

Available under request (see page A-6) | Disponível sobre consulta (consulte a página A-6) | Disponible bajo consulta (mire pagina A-6)



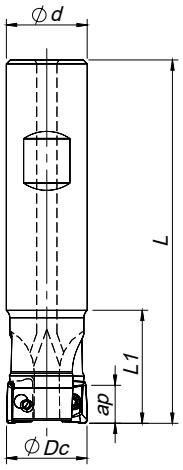

Weldon Shank

K_r=90° | γ_p=+6° ~+8°

Order code Código	Reference Referência Referencia		Dimensions | Dimensões | Dimensiones (mm)				Kg	Specifications	Insert Pastilha Inserto	Stock
			ØDc	Ød	L	L1		Ap max (mm)		
181041800	025W18090-02-06-025100	2	25	25	100	44	0,310	14,5	AP... 1604	
181042100	025W18090-02-06-025200	2	25	25	200	60	0,670	14,5	AP... 1604	
181041900	032W18090-03-07-032110	3	32	32	110	50	0,560	14,5	AP... 1604	
181042200	032W18090-03-07-032200	3	32	32	200	60	1,100	14,5	AP... 1604	
181042000	040W18090-04-08-032115	4	40	32	115	40	0,670	14,5	AP... 1604	
181042300	040W18090-04-08-032200	4	40	32	200	40	1,190	14,5	AP... 1604	

Stock item | Produto de stock | Itens de stock

Available under request (see page A-6) | Disponível sobre consulta (consulte a página A-6) | Disponible bajo consulta (mire pagina A-6)



SPARE PARTS | Complementos | Repuestos

Cutter ØDc	Insert Screw	Key (Torx)	Order separately Key (Torx - Nm)	Torque Value
				Nm
W18090 - 25-40	P0400900	XT15	DT1530	3,0
A18090 - 40-80	P0400900	XT15	DT1530	3,0
A18090 - 100-125	P0400900	PT15	DT1530	3,0

Note: The toolholder is supplied with the XT/PT key. To order the DT key please check the page A-243.
Check the procedures for the clamping screws on the page A-243.

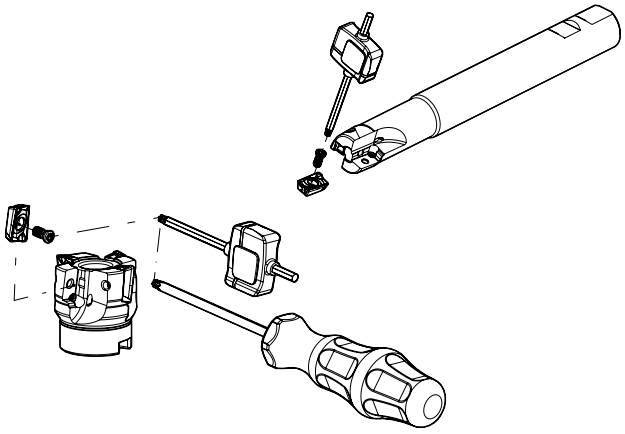

AP... 1604... | Inserts | Pastilhas | Plaquitas

APKT - X

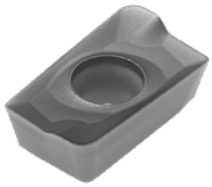

APKT - X1



APKT - X2

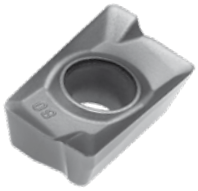

APKT - LN



APKT-X | X1 | X2 | LN

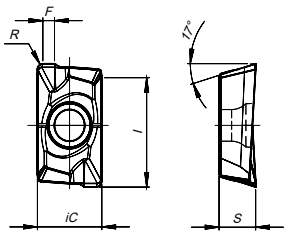

APHT - LN



APHT-LN

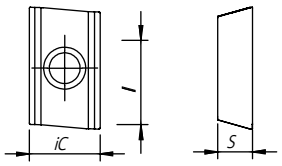

(1) Geometry code	ISO Reference	P						M				K					N		S		H	Dimensions Dimensões Dimensiones (mm)					
		CVD	PVD					CVD	PVD			CVD	PVD				UNC	PCD	PVD		PVD						
	(2) Grade code	T9	P7	68	G4	66	P3	R1	66	P3	G6	L5	68	G4	66	P3	10	D6	P3	G6	P7	iC	S	l	R	B	F
		PHS740	PH7603	PH6920	PH7920	PH6930	PH7930	PHM740	PH6930	PH7930	PH7740	PH5705	PH6920	PH7920	PH6930	PH7930	PH0910	PDP410	PH7930	PH7740	PH7603						
1112159	APKT 160408 PDER-X1			◬		◬			◬				◬		◬							9,45	5,35	16,00	0,80	-	1,80
1112464	APKT 160408 PDER-X2				◬		◬			◬				◬		◬						9,45	5,35	16,00	0,80	-	1,80
1112158	APKT 160408 PDSR-X1			◬		◬							◬		◬							9,45	5,35	16,00	0,80	-	1,80
1112367	APKT 160408 PDSR-X2				◬		◬							◬		◬						9,45	5,35	16,00	0,80	-	1,80
1111923	APKT 160408 PDFR-LN																◬					9,45	5,35	16,00	0.80	-	0,80
1111074	APKT 160416 PDER-X			◬									◬									9,45	5,35	16,00	1,60	-	1,20
1111050	APKT 160416 PDSR-X			◬		◬							◬		◬							9,45	5,35	16,00	1,60	-	1,20
1111075	APKT 160432 PDER-X			◬									◬									9,45	5,35	16,00	3,20	-	-
1111052	APKT 160432 PDSR-X			◬									◬									9,45	5,35	16,00	3,20	-	-
1111924	APHT 1604 PDFR-LN																◬					9,45	5,35	16,00	-	-	-

◬ First choice | Primeira opção | 1ª opción ◬ Stock item | Produto de stock | Itens de stock ◯ Available under request (see page A-7) | Disponível sobre consulta (consulte a página A-7) | Disponible bajo consulta (mire pagina A-7)

Insert order code = (1) Geometry Code + (2) Grade Code

page A-236 page A -244

LINEPRO 18090

GRADES SELECTION GUIDE | Guia para selecção de graus | Tabla para selección de calidades

ISO	PSM	Material	HB (Brinell)	Grades ← Wear Resistance — Toughness → PH0910	PH7(6)920	PH7 (6)30
P	1	Unalloyed Steel	125-220		✓	✓
	2	Low-Alloyed Steel	220-280		✓	✓
	3	High-Alloyed Steel	280-380		✓	✓
M	4	SS - Ferritic / Martensitic	200-330			✓
	5	SS - Austenitic	200-330			✓
	6	SS - Austenitic-ferritic (Duplex)	230-260			✓
K	7	Malleable Cast Iron	130-230		✓	✓
	8	Grey Cast Iron	180-245		✓	✓
	9	Nodular Cast iron	160-250		✓	✓
N	10	Aluminium and Non Ferrous	30-130	✓		

Good Conditions
Average Conditions
Difficult Conditions

RECOMMENDED CUTTING CONDITIONS | Condições de corte recomendadas | Condiciones de corte recomendables

ISO	PSM	Material	HB (Brinell)	Vc (m/min) ← Wear Resistance — Toughness → PH0910	PH7(6)920	PH7(6)930
P	1	Unalloyed Steel	125-220	-	150-230	150-180
	2	Low-Alloyed Steel	220-280	-	140-220	140-170
	3	High-Alloyed Steel	280-380	-	130-180	120-150
M	4	SS - Ferritic / Martensitic	200-330	-	-	90-150
	5	SS - Austenitic	200-330	-	-	80-130
	6	SS - Austenitic-ferritic (Duplex)	230-260	-	-	70-100
K	7	Malleable Cast Iron	130-230	-	150-280	80-230
	8	Grey Cast Iron	180-245	-	130-230	120-225
	9	Nodular Cast iron	160-250	-	80-190	80-180
N	10	Aluminium and Non Ferrous	30-130	350-1400	-	-

ISO	PSM	Material	HB (Brinell)	Feed fz (mm/t) APKT 16... PDER-X/X2	APKT 16... PDS(T)R-X/X2	AP...T 16... PDFR-LN
P	1	Unalloyed Steel	125-220	0,07-0,15	0,10-0,25	-
	2	Low-Alloyed Steel	220-280	0,07-0,10	0,10-0,20	-
	3	High-Alloyed Steel	280-380	0,07-0,10	0,10-0,20	-
M	4	SS - Ferritic / Martensitic	200-330	0,07-0,10	-	-
	5	SS - Austenitic	200-330	0,07-0,10	-	-
	6	SS - Austenitic-ferritic (Duplex)	230-260	0,07-0,10	-	-
K	7	Malleable Cast Iron	130-230	0,07-0,15	0,10-0,25	-
	8	Grey Cast Iron	180-245	0,07-0,15	0,10-0,25	-
	9	Nodular Cast iron	160-250	-	0,10-0,20	-
N	10	Aluminium and Non Ferrous	30-130	-	-	0,07-0,20

(Note 1) Cutting conditions a_e/Dc=70%.
(Note 2) Cutting conditions for slotting and shouldering operations:

Operation	a_e	Vc & fz	a_p (mm)
Slotting	100%	<20%	5,0-6,0
Shouldering	<50%	>8%	6,0-9,0
	≤25%	>12%	10,0-12,5

(Note 3) Cutting conditions should be adjusted according to the machine and work rigidity.
(Note 4) It's possible to occur vibrations in certain cases. Please reduce depth of cut and / or reduce cutting conditions in following cases:
- When using long shank;
- When using long tool overhang with arbor type;
- When application has poor clamping rigidity or when using a low rigidity machine.

CHIP-BREAKER SELECTION GUIDE | Guia para aplicações do quebra-aparas | Guía para aplicación del rompevirutas

ISO	PSM	Material	HB (Brinell)	Chip-Breaker Application	
				1st choise	Dificult Operations
P	1	Unalloyed Steel	125-220	APKT 16... PDER-X(X2)	APKT 16... PDSR-X(-X2)
	2	Low-Alloyed Steel	220-280	APKT 16... PDSR-X(X2)	-
	3	High-Alloyed Steel	280-380	APKT 16... PDSR-X(X2)	-
M	4	SS - Ferritic / Martensitic	200-330	APKT 16... PDER-X(X2)	-
	5	SS - Austenitic	200-330	APKT 16... PDER-X(X2)	-
	6	SS - Austenitic-ferritic (Duplex)	230-260	APKT 16... PDSR-X(X2)	-
K	7	Malleable Cast Iron	130-230	APKT 16... PDSR-X(X2)	APKT 16... PDSR-X(X2)
	8	Grey Cast Iron	180-245	APKT 16... PDSR-X(X2)	-
	9	Nodular Cast iron	160-250	APKT 16... PDSR-X(X2)	-
N	10	Aluminium and Non Ferrous	30-130	AP...T 16... PDFR-LN	APHT 16.... PDFR-LN

RAMPING AND HELICAL INTERPOLATION

Descida em rampa e interpolação helicoidal | Bajada en rampa e interpolación circular

Ramping

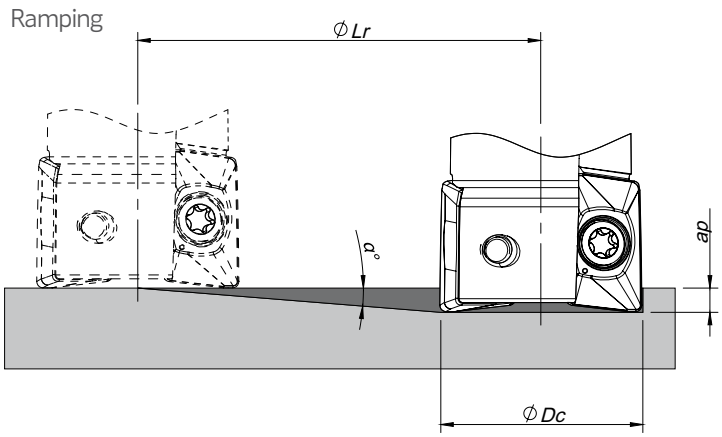

Helical Interpolation

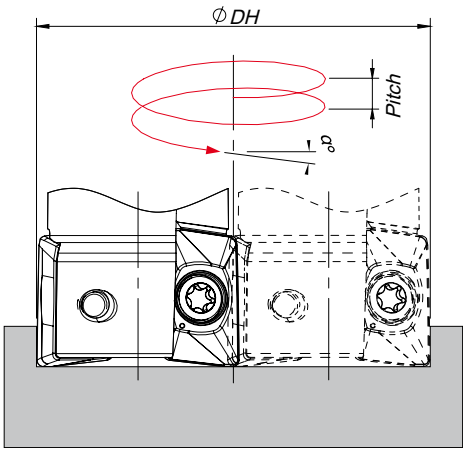

Blind hole
Flat bottom

Ødi = ØDH - ØDc

ØDc	Ramping			Helical Interpolation		
				Diameter for Blind Hole, Flat Bottom Face (1)		Max Pitch/Rev.
	Max Ramp a°	Max a_p	Min Lr	ØDHmin	ØDHmax	
25	3	14,5	276,7	46,1 -	- 48,4	3,5 3,9
32	2	14,5	415,2	60,1 -	- 62,4	3,1 3,3
40	1,5	14,5	553,7	76,1 -	- 78,4	3,0 3,2
50	1,1	14,5	755,2	96,1 -	- 98,4	2,8 2,9
63	0,85	14,5	977,3	122,1 -	- 124,4	2,8 2,9
80	0,64	14,5	1298,1	156,1 -	- 158,4	2,7 2,7
100	0,5	14,5	1661,5	196,1 -	- 198,4	2,6 2,7
125	0,38	14,5	2186,3	246,1 -	- 248,4	2,5 2,6

(1) Using insert radius 0,8 mm
Note: During helical interpolation do not exceed maximum pitch
When using different insert radius to calculate the ØDHmin and ØDHmax use the equation below:
- Minimum Diameter: ØDHmin = 2 x (ØDc - (R corner radius + F width of edge wiper))
- Maximum Diameter: ØDHmax = 2 x (ØDc - R corner radius)

page A-236
page A -244

LINEPRO 15090

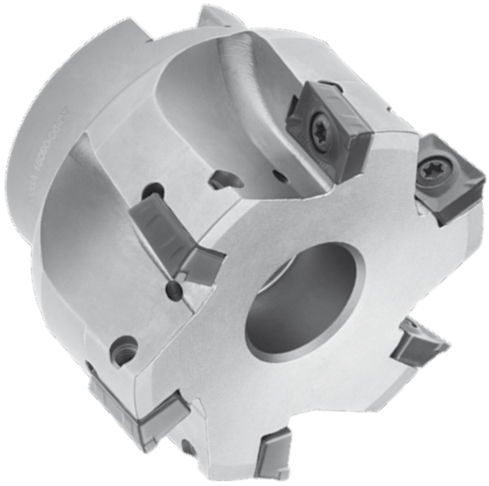

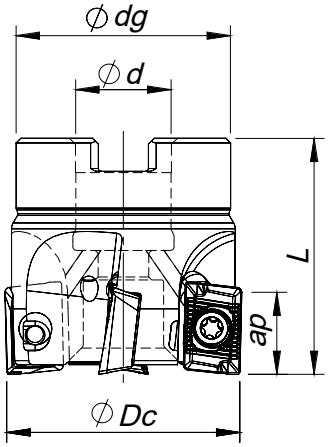

Arbor Mounting

K_r=90° | γ_p=7°

Order code Código	Reference Referência Referencia		Dimensions | Dimensões | Dimensiones (mm)				Kg	Specifications		Insert Pastilha Inserto	Stock
			ØDc	Ød/M	Ødg	L		Arbor Type	Ap max (mm)		
181035100	040A15090-04-07-016040	4	40	16	32	40	0,200	A	13,5	AD... 1505...	○
181025800	050A15090-05-07-022040	5	50	22	40	40	0,280	A	13,5	AD... 1505...	○
181014000	052A15090-05-07-022050	5	52	22	40	50	0,400	A	13,5	AD... 1505...	◈
181000100	063A15090-06-07-022040	6	63	22	52	40	0,560	A	13,5	AD... 1505...	○
181014100	066A15090-06-07-027050	6	66	27	48	50	0,680	A	13,5	AD... 1505...	◈
181010000	080A15090-07-07-027050	7	80	27	60	50	1,140	A	13,5	AD... 1505...	◈
181014200	100A15090-08-07-032050	8	100	32	75	50	1,710	B	13,5	AD... 1505...	○
181033400	125A15090-09-07-040063	9	125	40	86	63	3,160	B	13,5	AD... 1505...	◈

◈ Stock item | Produto de stock | Itens de stock

○ Available under request (see page A-6) | Disponível sobre consulta (consulte a página A-6) | Disponible bajo consulta (mire pagina A-6)



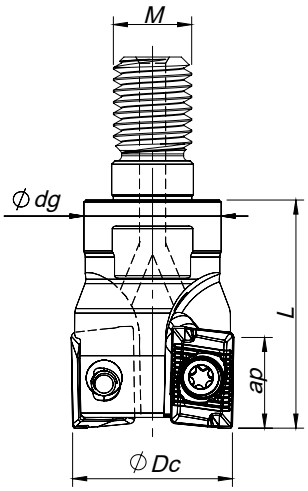

Threaded Coupling

K_r=90° | γ_p=7°

Order code Código	Reference Referência Referencia		Dimensions | Dimensões | Dimensiones (mm)				Kg	Specifications	Insert Pastilha Inserto	Stock
			ØDc	Ød/M	Ødg	L		Ap max (mm)		
181014800	025R15090-02-07-M12035	2	25	M12	21	35	0,100	13,5	AD... 1505...	◈
181014900	032R15090-03-07-M16043	3	32	M16	29	43	0,220	13,5	AD... 1505...	◈
181015000	040R15090-04-07-M16043	4	40	M16	29	43	0,290	13,5	AD... 1505...	○

◈ Stock item | Produto de stock | Itens de stock

○ Available under request (see page A-6) | Disponível sobre consulta (consulte a página A-6) | Disponible bajo consulta (mire pagina A-6)



SPARE PARTS | Complementos | Repuestos

Cutter ØDc	Insert Screw	Key (Torx)	Order separately Key (Torx - Nm)	Torque Value
R15090 - 25-40	P0400900	XT15	DT1530	3,0
A15090 - 40-80	P0400900	XT15	DT1530	3,0
A15090 - 100-125	P0400900	PT15	DT1530	3,0

Note: The toolholder is supplied with the XT/PT key. To order the DT key please check the page A-243.
Check the procedures for the clamping screws on the page A-243.

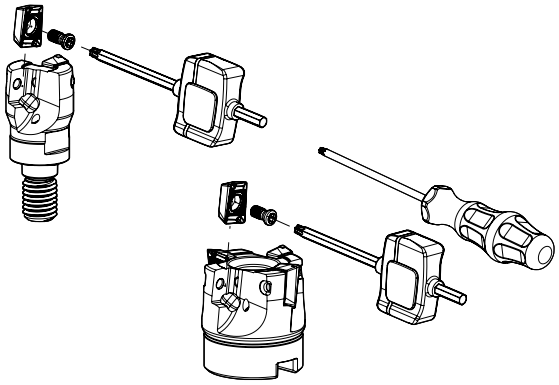

ADKT 1505 | Inserts | Pastilhas | Plaquitas

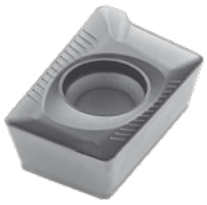

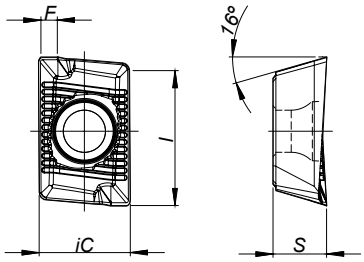

		P						M				K							N		S		H	Dimensions Dimensões Dimensiones (mm)					
		CVD	PVD					CVD	PVD			CVD			PVD				UNC	PCD	PVD		PVD						
	(2) Grade code	T9	P7	54	68	66	I5	R1	68	66	I5	L5	L6	L9	54	68	66	I5	10	D6	66	I5	P7						
(1) Geometry code	ISO Reference	PHS740	PH7603	PH6910	PH6920	PH6930	PH6740	PHM740	PH6920	PH6930	PH6740	PH5705	PH5320	PH5740	PH6910	PH6920	PH6930	PH6740	PH0910	PDP410	PH6930	PH6740	PH7603	iC	S	l	R	B	F
1110006	ADKT 1505 PDR				◉	○			◉	○						○	○							9,54	5,63	15,70	-	-	1,60
1111218	ADKT 1505 PDSR				◉	◎				◉						◉	◎							9,54	5,63	15,70	-	-	1,60
1111209	ADKT 1505 PDTR				◉	○				○						◉	○							9,54	5,63	15,70	-	-	1,60

◉ First choice | Primeira opção | 1ª opción ◎ Stock item | Produto de stock | Itens de stock ○ Available under request (see page A-7) | Disponível sobre consulta (consulte a página A-7) | Disponible bajo consulta (mire pagina A-7)

Insert order code = (1) Geometry Code + (2) Grade Code

GRADES SELECTION GUIDE | Guia para selecção de graus | Tabla para selección de calidades

ISO	PSM	Material	HB (Brinell)	Grades ← Wear Resistance — Toughness → PH6920	PH6930
P	1	Unalloyed Steel	125-220	✓	✓
	2	Low-Alloyed Steel	220-280	✓	✓
	3	High-Alloyed Steel	280-380	✓	✓
M	4	SS - Ferritic / Martensitic	200-330	✓	✓
	5	SS - Austenitic	200-330	✓	✓
	6	SS - Austenitic-ferritic (Duplex)	230-260	✓	✓
K	7	Malleable Cast Iron	130-230	✓	✓
	8	Grey Cast Iron	180-245	✓	✓
	9	Nodular Cast iron	160-250	✓	✓

◉ Good Conditions
◎ Average Conditions
Difficult Conditions

LINEPRO 15090

RECOMMENDED CUTTING CONDITIONS | Condições de corte recomendadas | Condiciones de corte recomendables

ISO	PSM	Material	HB (Brinell)	Vc (m/min) ← Wear Resistance — Toughness →	
				PH6920	PH6930
P	1	Unalloyed Steel	125-220	150-230	150-180
	2	Low-Alloyed Steel	220-280	140-220	140-170
	3	High-Alloyed Steel	280-380	130-180	120-150
M	4	SS - Ferritic / Martensitic	200-330	120-160	90-150
	5	SS - Austenitic	200-330	100-150	80-130
	6	SS - Austenitic-ferritic (Duplex)	230-260	70-110	70-110
K	7	Malleable Cast Iron	130-230	150-280	150-280
	8	Grey Cast Iron	180-245	130-230	130-230
	9	Nodular Cast iron	160-250	80-190	80-190

ISO	PSM	Material	HB (Brinell)	Feed fz (mm/t)		
				ADKT 15... PDR	ADKT 15... PDSR	ADKT 15... PDTR
P	1	Unalloyed Steel	125-220	0,07-0,20	0,10-0,25	0,08-020
	2	Low-Alloyed Steel	220-280	0,07-0,15	0,10-020	0,08-0,15
	3	High-Alloyed Steel	280-380	0,07-0,15	0,10-020	0,08-0,15
M	4	SS - Ferritic / Martensitic	200-330	0,07-0,20	0,10-0,25	0,08-020
	5	SS - Austenitic	200-330	0,07-0,15	0,10-020	0,08-0,15
	6	SS - Austenitic-ferritic (Duplex)	230-260	0,07-0,15	0,10-020	0,08-0,15
K	7	Malleable Cast Iron	130-230	0,07-0,15	0,10-0,25	0,08-020
	8	Grey Cast Iron	180-245	0,07-0,15	0,10-025	0,08-0,20
	9	Nodular Cast iron	160-250	-	0,10-020	0,08-0,15

(Note 1) Cutting conditions a_e/Dc=70%.
(Note 2) Cutting conditions for slotting and shouldering operations:

Operation	a_e	Vc & fz	a_p (mm)
Slotting	100%	<20%	4,0-5,0
Shouldering	<50%	>8%	5,0-7,0
	≤25%	>12%	8,0-11,0

(Note 3) Cutting conditions should be adjusted according to the machine and work rigidity.
(Note 4) It's possible to occur vibrations in certain cases. Please reduce depth of cut and / or reduce cutting conditions in following cases:
- When using long shank;
- When using long tool overhang with arbor type;
- When application has poor clamping rigidity or when using a low rigidity machine.

(Note 5) If chattering occurs, reduce ap and Vc by 30% and keep the same fz per tooth.

CHIP-BREAKER SELECTION GUIDE | Guia para aplicações do quebra-aparas | Guía para aplicación del rompevirutas

ISO	PSM	Material	HB (Brinell)	Chip-Breaker Application	
				1st choise	Dificult Operations
P	1	Unalloyed Steel	125-220	ADKT 15... PDR	ADKT 15... PDS(T)R
	2	Low-Alloyed Steel	220-280	ADKT 15... PDR	ADKT 15... PDS(T)R
	3	High-Alloyed Steel	280-380	ADKT 15... PDS(T)R	-
M	4	SS - Ferritic / Martensitic	200-330	ADKT 15... PDR	-
	5	SS - Austenitic	200-330	ADKT 15... PDR	-
	6	SS - Austenitic-ferritic (Duplex)	230-260	ADKT 15... PDR	-
K	7	Malleable Cast Iron	130-230	ADKT 15... PDR	ADKT 15... PDS(T)R
	8	Grey Cast Iron	180-245	ADKT 15... PDS(T)R	-
	9	Nodular Cast iron	160-250	ADKT 15... PDS(T)R	-

RAMPING AND HELICAL INTERPOLATION

Descida em rampa e interpolação helicoidal | Bajada en rampa e interpolación circular

Ramping

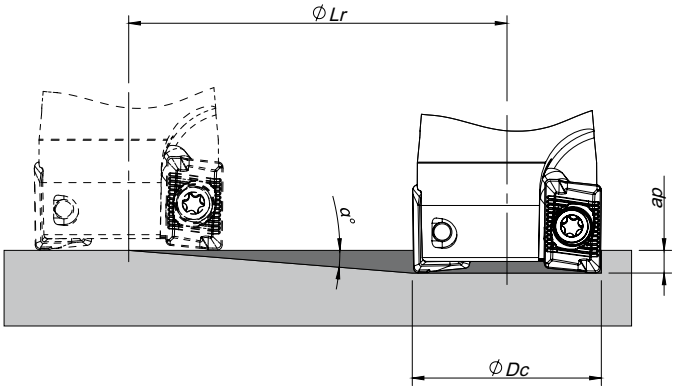

Helical Interpolation

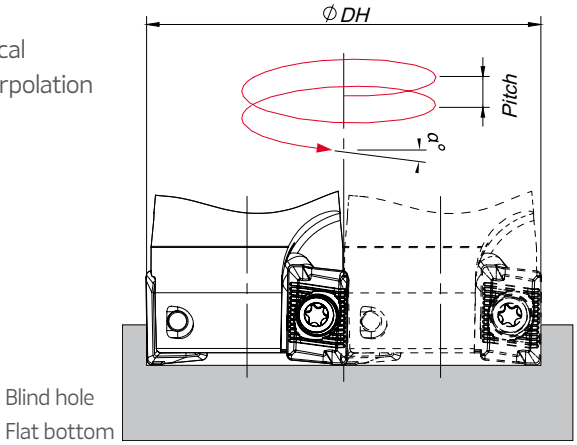

Ødi = ØDH - ØDc

ØDc	Ramping			Helical Interpolation		
				Diameter for Blind Hole, Flat Bottom Face (1)		Max Pitch/Rev.
	Max Ramp a°	Max a_p	Min Lr	ØDHmin	ØDHmax	
25	5	13,5	154,3	45,3 -	- 48,4	5,6 6,4
32	3,6	13,5	214,6	59,3 -	- 62,4	5,4 6,0
40	2,6	13,5	297,3	75,3 -	- 78,4	5,0 5,5
50	2	13,5	386,6	95,3 -	- 98,4	5,0 5,3
52	1,8	13,5	429,6	99,3 -	- 102,4	4,7 5,0
63	1,4	13,5	552,4	121,3 -	- 124,4	4,5 4,7
66	1,3	13,5	594,9	127,3 -	- 130,4	4,4 4,6
80	1	13,5	773,4	155,3 -	- 158,4	4,1 4,3
100	0,8	13,5	966,8	195,3 -	- 198,4	4,2 4,3
125	0,6	13,5	1289,1	245,3 -	- 248,4	4,0 4,1

Note: During helical interpolation do not exceed maximum pitch

page A-236
page A -244

PLUS 49095



Threaded Coupling

$K_r = 95°$ | $\gamma_p = -7°$

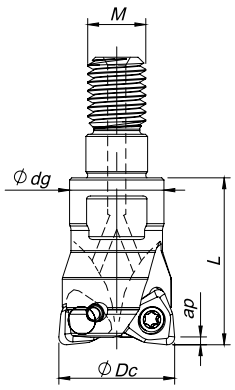

Order code Código	Reference Referência Referencia		Dimensions | Dimensões | Dimensiones (mm)				Kg	Specifications	Insert Pastilha Inserto	Stock
			ØDc	M	Ødg	L		Ap max (mm)		
181030400	016R49095-02-07-M08023	2	16	M8	13	23	0,024	0,30	WNHU 04T310	◈
181028600	020R49095-03-07-M10028	3	20	M10	18	28	0,052	0,30	WNHU 04T310	◈
181030500	025R49095-04-07-M12030	4	25	M12	21	30	0,082	0,30	WNHU 04T310	◈
181030600	035R49095-05-07-M16035	5	35	M16	29	35	0,190	0,30	WNHU 04T310	◈

◈ Stock item | Produto de stock | Itens de stock ◯ Available under request (see page A-6) | Disponível sobre consulta (consulte a página A-6) | Disponible bajo consulta (mire pagina A-6)

WNHU 04T310 | Inserts | Pastilhas | Plaquitas



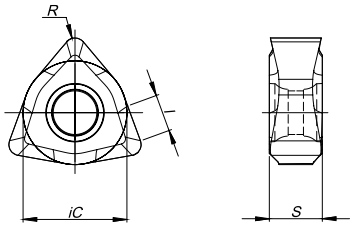

		P						M				K							N		S		H	Dimensions Dimensões Dimensiones (mm)				
		CVD	PVD					CVD	PVD			CVD			PVD				UNC	PCD	PVD		PVD					
	(2) Grade code	T9	P7	G1	G4	P3	G6	R1	G4	P3	G6	L5	L6	L9	G1	G4	P3	G6	10	D6	P3	G6	P7					
(1) Geometry code	ISO Reference	PHS740	PH7603	PH7910	PH7920	PH7930	PH7740	PHM740	PH7920	PH7930	PH7740	PH5705	PH5320	PH5740	PH7910	PH7920	PH7930	PH7740	PH0910	PDP410	PH7930	PH7740	PH7603	iC	S	I	R	F
1110783	WNHU 04T310		◈	◈	◈										◈	◈							◈	6,35	3,50	2,80	1,00	-

◈ First choice | Primeira opção | 1ª opción ◈ Stock item | Produto de stock | Itens de stock ◯ Available under request (see page A-7) | Disponível sobre consulta (consulte a página A-7) | Disponible bajo consulta (mire pagina A-7)

Insert order code = (1) Geometry Code + (2) Grade Code

SPARE PARTS | Complementos | Repuestos

Order separately

Cutter ØDc	Insert Screw	Key (Torx)	Key (Torx - Nm)	Torque Value
				
R49095 - 16-35	P0250704	XT08	DT0812	1,2

Note: The toolholder is supplied with the XT/PT key. To order the DT key please check the page A-243.
Check the procedures for the clamping screws on the page A-243.

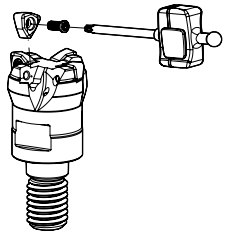



GRADES SELECTION GUIDE | Guia para selecção de graus | Tabla para selección de calidades

ISO	PSM	Material	HB (Brinell)	Grades ← Wear Resistance		Toughness →
				PH6103	PH7910	PH7920
P	1	Unalloyed Steel	125-220	✓	✓	✓
	2	Low-Alloyed Steel	220-280	✓	✓	✓
	3	High-Alloyed Steel	280-380	✓	✓	✓
K	7	Malleable Cast Iron	130-230		✓	✓
	8	Grey Cast Iron	180-245		✓	✓
	9	Nodular Cast iron	160-250		✓	✓
H	12	Hardened Steels	40-55 HRC	✓		

Good conditions
Average Conditions
Difficult Conditions

(Note 1) Grade PH6103 must be used only on finishing operations.

RECOMMENDED CUTTING CONDITIONS | Condições de corte recomendadas | Condiciones de corte recomendables

ISO	PSM	Material	HB (Brinell)	Vc (m/min) ← Wear Resistance		Toughness →
				PH6103	PH7910	PH7920
P	1	Unalloyed Steel	125-220	180-300	190-280	160-250
	2	Low-Alloyed Steel	220-280	180-250	180-240	150-230
	3	High-Alloyed Steel	280-380	180-230	170-220	140-200
K	7	Malleable Cast Iron	130-230	-	180-320	170-290
	8	Grey Cast Iron	180-245	-	170-280	140-250
	9	Nodular Cast iron	160-250	-	100-240	90-220
H	12	Hardened Steels	40-55 HRC	140-220	-	-

(Note 1) Grade PH6103 must be used only on finishing operations.

Insert	Feed f_z (mm/t)		a_p Rec.
	Roughing	Finishing	
WNHU 04T310	0.15-0.25	0.10-0.20	0.10-0.50

(Note 1) Cutting conditions should be adjusted according to the machine and work rigidity.
(Note 2) If chattering occurs, reduce a_p and V_c by 30% and keep the same f_z per tooth.

page A-236
page A -244

PLUS 45095



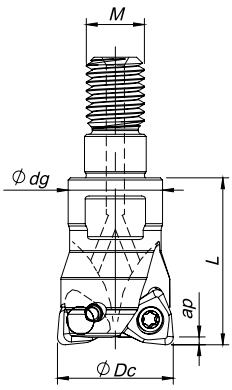

Threaded Coupling

$\kappa_r = 95°$ | $\gamma_p = -6°$

Order code Código	Reference Referência Referencia		Dimensions | Dimensões | Dimensiones (mm)				Kg	Specifications	Insert Pastilha Inserto	Stock
			ØDc	M	Ødg	L		Ap max (mm)		
181037500	025R45095-02-06-M12030	2	25	M12	21	30	0,079	0,50	WNHU 060410	◈
181037600	035R45095-03-06-M16035	3	35	M16	29	35	0,185	0,50	WNHU 060410	◈
181037700	042R45095-04-06-M16035	4	42	M16	29	35	0,219	0,50	WNHU 060410	◈

◈ Stock item | Produto de stock | Itens de stock

◯ Available under request (see page A-6) | Disponível sobre consulta (consulte a página A-6) | Disponible bajo consulta (mire pagina A-6)

WNHU 060410 | Inserts | Pastilhas | Plaquitas

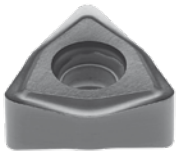

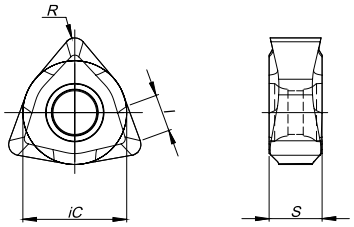

		P						M				K							N		S		H	Dimensions Dimensões Dimensiones (mm)				
		CVD	PVD					CVD	PVD			CVD			PVD				UNC	PCD	PVD		PVD					
	(2) Grade code	T9	P7	G1	G4	P3	G6	R1	G4	P3	G6	L5	L6	L9	G1	G4	P3	G6	10	D6	P3	G6	P7					
(1) Geometry code	ISO Reference	PHS740	PH7603	PH7910	PH7920	PH7930	PH7740	PHM740	PH7920	PH7930	PH7740	PH5705	PH5320	PH5740	PH7910	PH7920	PH7930	PH7740	PH0910	PDP410	PH7930	PH7740	PH7603	iC	S	l	R	F
1111424	WNHU 060410		◈	◈	◈										◈	◈							◈	9,53	4,76	3,40	1,00	-

◈ First choice | Primeira opção | 1ª opción

◈ Stock item | Produto de stock | Itens de stock

◯ Available under request (see page A-7) | Disponível sobre consulta (consulte a página A-7) | Disponible bajo consulta (mire pagina A-7)

Insert order code = (1) Geometry Code + (2) Grade Code

SPARE PARTS | Complementos | Repuestos

Order separately

Cutter ØDc	Insert Screw	Key (Torx)	Key (Torx - Nm)	Torque Value
				
R45095 - 25-42	P0350902	XT10	DT1020	2,0

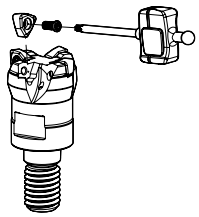

Note: The toolholder is supplied with the XT/PT key. To order the DT key please check the page A-243.
Check the procedures for the clamping screws on the page A-243.



GRADES SELECTION GUIDE | Guia para selecção de graus | Tabla para selección de calidades

ISO	PSM	Material	HB (Brinell)	Grades ← Wear Resistance		Toughness →
				PH6103	PH7910	PH7920
P	1	Unalloyed Steel	125-220	✓	✓	✓
	2	Low-Alloyed Steel	220-280	✓	✓	✓
	3	High-Alloyed Steel	280-380	✓	✓	✓
K	7	Malleable Cast Iron	130-230		✓	✓
	8	Grey Cast Iron	180-245		✓	✓
	9	Nodular Cast iron	160-250		✓	✓
H	12	Hardened Steels	40-55 HRC	✓		

Good Conditions
Average Conditions
Difficult Conditions

(Note 1) Grade PH6103 must be used only on finishing operations.

RECOMMENDED CUTTING CONDITIONS | Condições de corte recomendadas | Condiciones de corte recomendables

ISO	PSM	Material	HB (Brinell)	Vc (m/min) ← Wear Resistance		Toughness →
				PH6103	PH7910	PH7920
P	1	Unalloyed Steel	125-220	180-300	190-280	160-250
	2	Low-Alloyed Steel	220-280	180-250	180-240	150-230
	3	High-Alloyed Steel	280-380	180-230	170-220	140-220
K	7	Malleable Cast Iron	130-230	-	180-320	170-290
	8	Grey Cast Iron	180-245	-	170-280	140-250
	9	Nodular Cast iron	160-250	-	100-240	90-220
H	12	Hardened Steels	40-55 HRC	140-220	-	-

(Note 1) Grade PH6103 must be used only on finishing operations.

Insert	Feed f_z (mm/t)		a_p Rec.
	Roughing	Finishing	
WNHU 060410	0.15-0.30	0.10-0.25	0.10-0.50

(Note 1) Cutting conditions should be adjusted according to the machine and work rigidity.
(Note 2) If chattering occurs, reduce a_p and V_c by 30% and keep the same f_z per tooth.

TOROMILL 33590 | 33690 | 33790



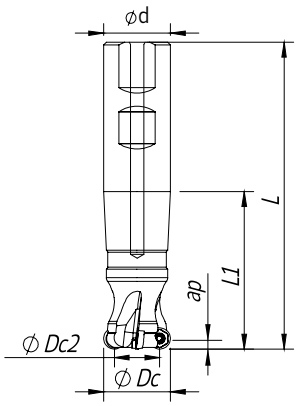

Weldon Shank

γ_p=+5°

Order code Código	Reference Referência Referencia		Dimensions | Dimensões | Dimensiones (mm)					Kg	Specifications	Insert Pastilha Inserto	Stock
			ØDc	ØDc2	Ød/M	L	L1		Ap max (mm)		
33590											
181122300	016W33590-02-04-016100	2	16	8	16	100	40	0,18	4,0	RD...0802 M0E	○
181122400	020W33590-03-05-020115	3	20	12	20	115	50	0,25	4,0	RD...0802 M0E	○
181112600	025W33590-04-05-025115	4	25	17	25	115	60	0,34	4,0	RD...0802 M0E	○
33690											
181123100	020W33690-02-05-016100	2	20	10	16	100	50	0,24	5,0	RP...10T3 M0E	○
181123200	025W33690-03-05-020115	3	25	15	20	115	60	0,37	5,0	RP...10T3 M0E	○
181123300	032W33690-04-05-025130	4	32	22	25	130	70	0,56	5,0	RP...10T3 M0E	○

Stock item | Produto de stock | Itens de stock

○ Available under request (see page A-6) | Disponível sobre consulta (consulte a página A-6) | Disponible bajo consulta (mire pagina A-6)



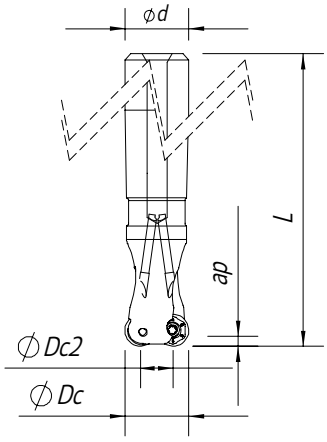

Cylindrical Shank

γ_p= +5°

Order code Código	Reference Referência Referencia		Dimensions | Dimensões | Dimensiones (mm)					Kg	Specifications	Insert Pastilha Inserto	Stock
			ØDc	ØDc2	Ød/M	L	L1		Ap max (mm)		
33590											
181122500	016E33590-02-04-016160	2	16	8	16	160	59	0,23	4,0	RD...0802 M0E	
181122600	020E33590-03-05-020180	3	20	12	20	180	59	0,36	4,0	RD...0802 M0E	
181122700	025E33590-04-05-025200	4	25	17	25	200	59	0,65	4,0	RD...0802 M0E	
33690											
181123400	020E33690-02-05-020180	2	20	10	20	180	50	0,40	5,0	RP...10T3 M0E	
181123500	025E33690-03-05-025200	3	25	15	25	200	60	0,76	5,0	RP...10T3 M0E	
181123600	032E33690-04-05-032200	4	32	22	32	200	60	0,98	5,0	RP...10T3 M0E	

Stock item | Produto de stock | Itens de stock

○ Available under request (see page A-6) | Disponível sobre consulta (consulte a página A-6) | Disponible bajo consulta (mire pagina A-6)

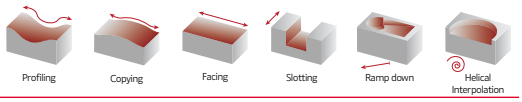



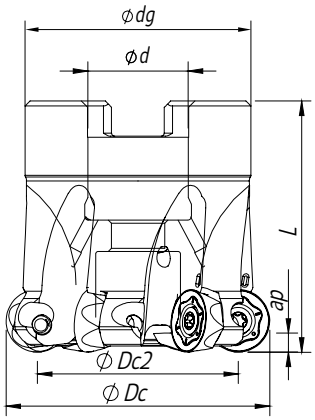

Arbor Mounting

γ_p= +5°

Order code Código	Reference Referência Referencia		Dimensions | Dimensões | Dimensiones (mm)					Kg	Specifications		Insert Pastilha Inserto	Stock
			ØDc	ØDc2	Ød/M	Ødg	L		Arbor Type	Ap max (mm)		
					33690							
181123700	042A33690-06-05-016040	6	42	32	16	36	40	0,16	A	5,0	RP...10T3 M0E	◎
181123800	050A33690-06-05-022040	6	50	40	22	42	40	0,26	A	5,0	RP...10T3 M0E	◎
181123900	052A33690-07-05-022040	7	52	42	22	42	40	0,30	A	5,0	RP...10T3 M0E	○
					33790							
181098700	040A33790-04-05-016040	4	40	28	26	36	40	0,15	A	6,0	RP...1204 M0E	◎
181111500	050A33790-04-05-022040	4	50	38	22	42	40	0,20	A	6,0	RP...1204 M0E	◎
181124200	052A33790-05-05-022040	5	52	40	22	42	40	0,25	A	6,0	RP...1204 M0E	◎
181122100	063A33790-06-05-022040	6	63	51	22	48	40	0,36	A	6,0	RP...1204 M0E	◎
181124300	066A33790-06-05-027050	6	66	54	27	48	50	0,40	A	6,0	RP...1204 M0E	○
181124400	080A33790-07-05-027050	7	80	68	27	60	50	0,68	A	6,0	RP...1204 M0E	○

◎ Stock item | Produto de stock | Itens de stock

○ Available under request (see page A-6) | Disponível sobre consulta (consulte a página A-6) | Disponible bajo consulta (mire pagina A-6)



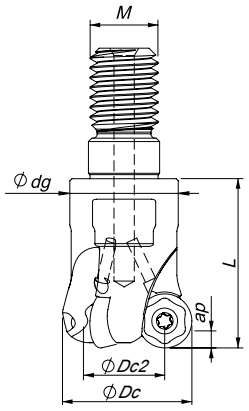

Threaded Coupling

γ_p= +5°

Order code Código	Reference Referência Referencia		Dimensions | Dimensões | Dimensiones (mm)					Kg	Specifications	Insert Pastilha Inserto	Stock
			ØDc	ØDc2	Ød/M	Ødg	L		Ap max (mm)		
					33590						
181098600	016R33590-02-04-M08020	2	16	8	M8	13	20	0,03	4,0	RD...0802 M0E	◎
181122800	020R33590-03-05-M10025	3	20	12	M10	16	25	0,07	4,0	RD...0802 M0E	◎
181122900	025R33590-04-05-M12030	4	25	17	M12	21	30	0,14	4,0	RD...0802 M0E	◎
181123000	032R33590-05-05-M16043	5	32	24	M16	29	43	0,25	4,0	RD...0802 M0E	○
					33690						
181110600	020R33690-02-05-M10032	2	20	10	M10	16	32	0,10	5,0	RP...10T3 M0E	○
181110700	025R33690-03-05-M12035	3	25	15	M12	21	35	0,19	5,0	RP...10T3 M0E	◎
181110800	032R33690-04-05-M16035	4	32	22	M16	29	35	0,31	5,0	RP...10T3 M0E	◎
181120700	035R33690-05-05-M16045	5	35	25	M16	29	45	0,40	5,0	RP...10T3 M0E	◎

◎ Stock item | Produto de stock | Itens de stock

○ Available under request (see page A-6) | Disponível sobre consulta (consulte a página A-6) | Disponible bajo consulta (mire pagina A-6)

page A-236
page A -244

TOROMILL 33890 | 33990



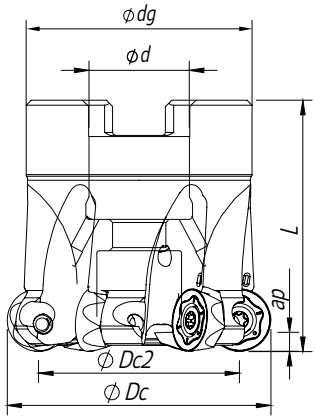

Arbor Mounting

γ_p = 5°

Order code Código	Reference Referência Referencia		Dimensions | Dimensões | Dimensiones (mm)					Kg	Specifications		Insert Pastilha Inserto	Stock
			ØDc	ØDc2	Ød/M	Ødg	L		Arbor Type	Ap max (mm)		
33890												
181124500	050A33890-04-05-022040	4	50	34	22	42	40	0,21	A	8,0	RP...1605 M0E	○
181124600	052A33890-04-05-022040	4	52	36	22	42	40	0,25	A	8,0	RP...1605 M0E	○
181114900	063A33890-05-05-022040	5	63	47	22	48	40	0,37	A	8,0	RP...1605 M0E	◈
181124700	066A33890-05-05-027050	5	66	54	27	48	50	0,46	A	8,0	RP...1605 M0E	◈
181124800	080A33890-06-05-027052	6	80	64	27	60	52	0,85	A	8,0	RP...1605 M0E	◈
181124900	100A33890-07-05-032052	7	100	84	32	80	52	1,57	A	8,0	RP...1605 M0E	◈
181122200	125A33890-08-05-040052	8	125	109	40	90	52	2,12	A	8,0	RP...1605 M0E	◈
33990												
181112200	080A33990-05-05-027050	5	80	60	27	60	50	0,73	A	10,0	RP...2006 M0E	◈
181099800	100A33990-06-05-032063	6	100	80	32	80	63	1,62	A	10,0	RP...2006 M0E	◈
181099900	125A33990-06-05-040063	6	125	105	40	90	63	2,53	A	10,0	RP...2006 M0E	◈

◈ Stock item | Produto de stock | Itens de stock

○ Available under request (see page A-6) | Disponível sobre consulta (consulte a página A-6) | Disponible bajo consulta (mire pagina A-6)

SPARE PARTS | Complementos | Repuestos

Order separately

Cutter ØDc	Insert Screw	Key (Torx)	Key (Torx - Nm)	Torque Value
			Nm	Nm
33590	P0250503	XT08	DT0812	1,20
33690	P0300800	XT09	DT0914	1,40
33790	P0350800	XT15	DT1530	3,00
33890	P0451100	XT20	DT2050	5,00
33990	P0501302	PT20	DT2050	5,00

Note: The toolholder is supplied with the XT/PT key. To order the DT key please check the page A-243.
Check the procedures for the clamping screws on the page A-243.

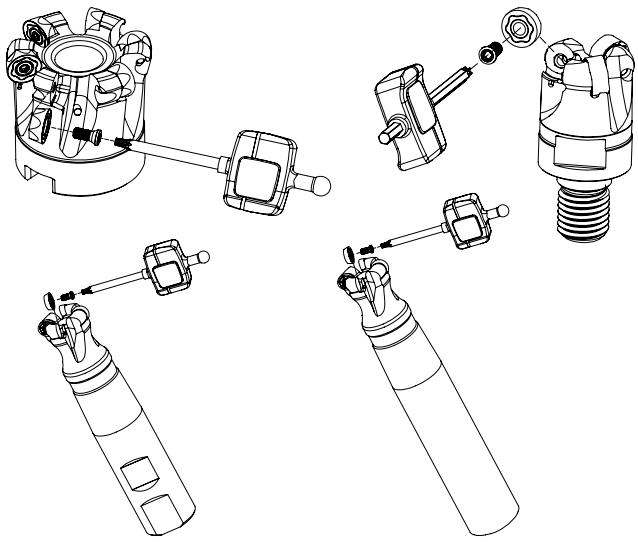

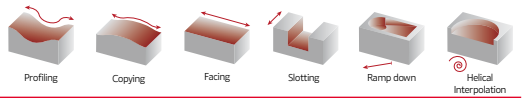

RDHT ‖ RPHT ‖ Inserts | Pastilhas | Plaquitas

RDHT



RPHT



RDHT

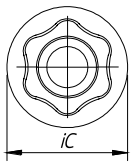

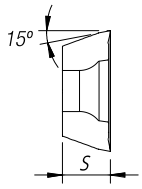

RPHT

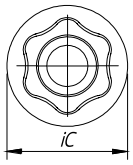

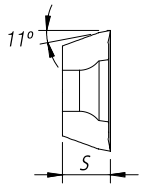

		P				M					K						N		S			H	Dimensions Dimensões Dimensiones (mm)					
		CVD	PVD			CVD		PVD			CVD			PVD			UNC	PCD	CVD	PVD		PVD						
	(2) Grade code	T9	G1	G4	P3	T9	R1	G4	P3	G6	L5	L6	L9	54	68	66	10	D6	R1	P3	G6	M6						
(1) Geometry code	ISO Reference	PHS740	PH7910	PH7920	PH7930	PHS740	PHM740	PH7920	PH7930	PH7740	PH5705	PH5320	PH5740	PH7910	PH7920	PH7930	PH0910	PDP410	PHM740	PH7930	PH7740	PH6103	iC	S	I	F	B	R
1112152	RDHT 0802 M0E-LS			○			◈		◉	○									◈	◉	○		8,00	2,38	-	-	-	-
1112772	RPHT 10T3 M0E-LS	◉				◈	◉												◉				10,00	3,97	-	-	-	-
1112766	RPHT 1204 M0E-LS	◉				◈	◉												◉				12,00	4,76	-	-	-	-
1112253	RPHT 10T3 M0E-MS			○			◈		◉	○									◈	◉	○		10,00	3,97	-	-	-	-
1112186	RPHT 1204 M0E-MS			○			◈		◉	○									◈	◉	○		12,00	4,76	-	-	-	-
1112254	RPHT 1605 M0E-MS			○			◈		◉	○									◈	◉	○		16,00	5,56	-	-	-	-
1112153	RPHT 2006 M0E-MS			○			◈		◉	○									◈	◉	○		20,00	6,35	-	-	-	-

◉ First choice | Primeira opção | 1ª opción ◈ Stock item | Produto de stock | Itens de stock ○ Available under request (see page A-7) | Disponível sobre consulta (consulte a página A-7) | Disponible bajo consulta (mire pagina A-7)

Insert order code = (1) Geometry Code + (2) Grade Code

PHM GRADE

PHM GRADE ‖ Grau PHM | Calidad PHM

MT CVD coated carbide grade, named PHM.

Developed to provide a better performance in milling of stainless-steels and high temperature alloys.

M S

Main features:

- Extraordinary heat resistance
- High toughness
- Excellent resistance to notching
- CVD high-performance coating with maximum hardness and extremely smooth surface

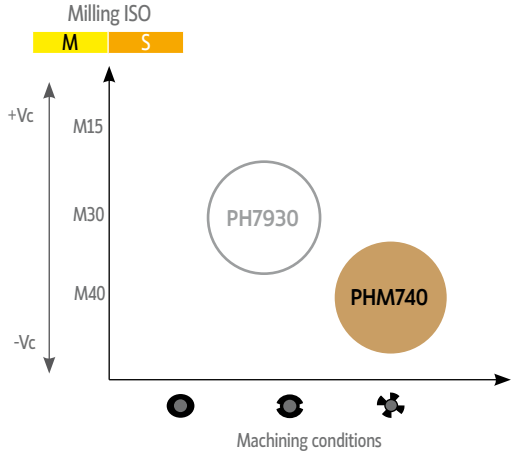

Good Conditions
Average Conditions
Difficult Conditions

page A-236
page A -244

TOROMILL 33590 | 33690 | 33790 | 33890 | 33990

GRADES SELECTION GUIDE | Guia para selecção de graus | Tabla para selección de calidades

ISO	PSM	Material	HB (Brinell)	Grades ← Wear Resistance Toughness → PH7930	PHM740
M	4	SS - Ferritic / Martensitic	200-330	✓	✓
	5	SS - Austenitic	200-330	✓	✓
	6	SS - Austenitic-ferritic (Duplex)	230-260	✓	✓
S	11	Heat Resistant Super Alloys	200-320	✓	✓

Good Conditions
Average Conditions
Difficult Conditions

RECOMMENDED CUTTING CONDITIONS | Condições de corte recomendadas | Condiciones de corte recomendables

ISO	PSM	Material	HB (Brinell)	Vc (m/min) ← Wear Resistance Toughness → PH7930	PHM740	RD... 08 fz (mm/t)	RD... 08 ap (mm)	RP... 10 fz (mm/t)	RP... 10 ap (mm)
M	4	SS - Ferritic / Martensitic	200-330	100-120	100-130	0,05-0,25	≤4,00	0,05-0,30	≤5,00
	5	SS - Austenitic	200-330	80-110	80-120	0,05-0,25		0,05-0,30	
	6	SS - Austenitic-ferritic (Duplex)	230-260	70-100	70-110	0,05-0,25		0,05-0,03	
S	11	Heat Resistant Super Alloys	200-320	20-80	20-90	0,05-0,20		0,05-0,25	

ISO	PSM	Material	HB (Brinell)	RP... 12 fz (mm/t)	RP... 12 ap (mm)	RP... 16 fz (mm/t)	RP... 16 ap (mm)	RP... 20 fz (mm/t)	RP... 20 ap (mm)
M	4	SS - Ferritic / Martensitic	200-330	0,05-0,35	≤6,00	0,08-0,45	≤8,00	≤0,25	≤10,00
	5	SS - Austenitic	200-330	0,05-0,35		0,08-0,45		≤0,25	
	6	SS - Austenitic-ferritic (Duplex)	230-260	0,05-0,35		0,08-0,45		≤0,21	
S	11	Heat Resistant Super Alloys	200-320	0,05-0,30		0,08-0,35		≤0,12	

INSERT INFORMATION | Informação de pastilha | Información del inserto

The maximum depth of cut using 6 cutting edges

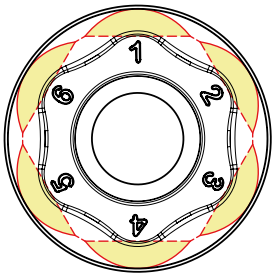

6 cutting edges

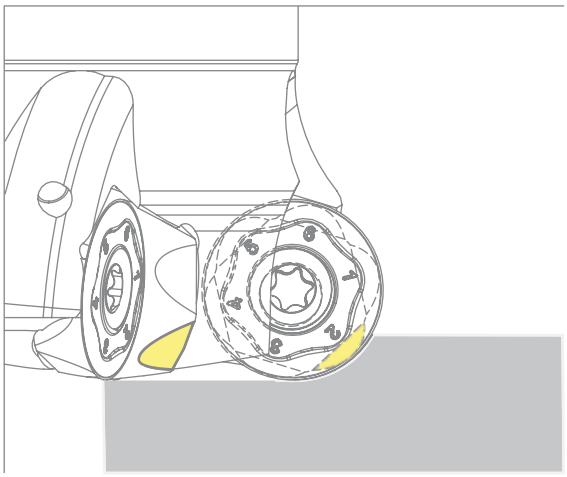

TOROMILL 33590

RDHT 0802...

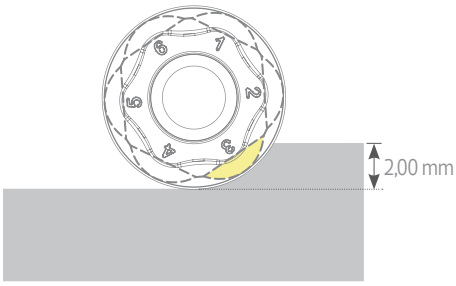

TOROMILL 33690

RPHT 10T3...

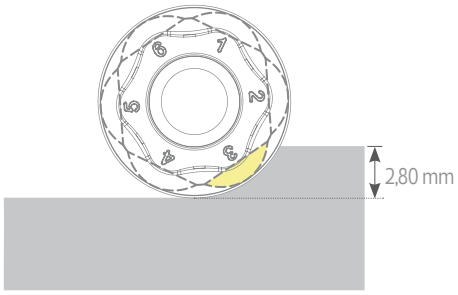

TOROMILL 33790

RPHT 1204...

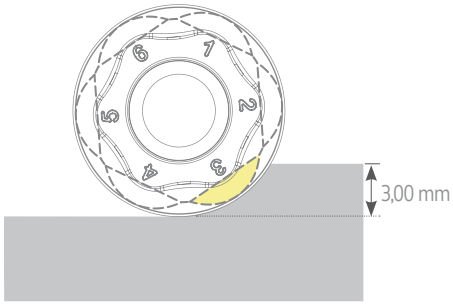

TOROMILL 33890

RPHT 1605...

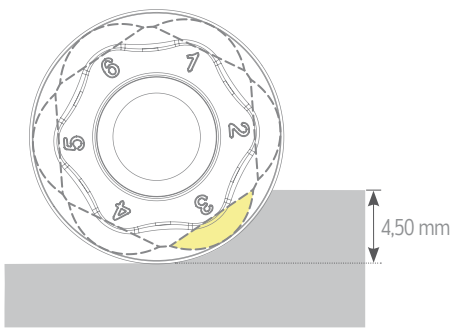

TOROMILL 33990

RPHT 2006...

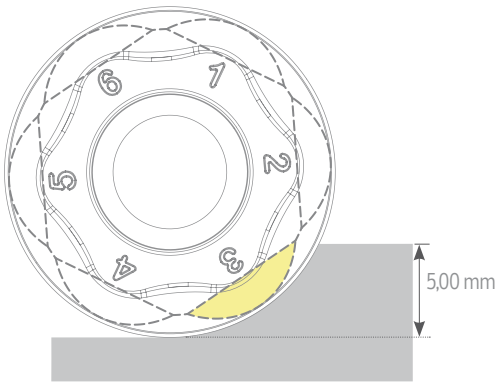

page A-236
page A -244



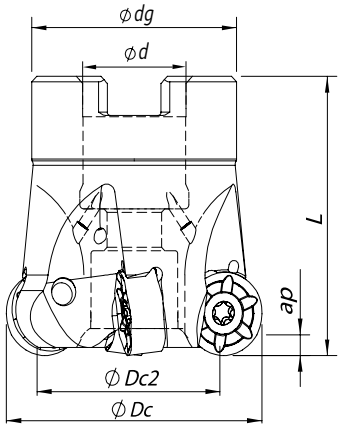

Arbor Mounting

γ_p=-7°

Order code Código	Reference Referência Referencia		Dimensions | Dimensões | Dimensiones (mm)					Kg	Specifications		Insert Pastilha Inserto	Stock
			ØDc	ØDc2	Ød/M	Ødg	L		Arbor Type	Ap max (mm)		
181111600	040A35190-04-07-016040	4	40	32	16	32	40	0,20	A	3,0	RNHX 1204 M0E...	◈
181100200	050A35190-05-07-022040	5	50	42	22	40	40	0,24	A	3,0	RNHX 1204 M0E...	◈
181128800	063A35190-06-07-022050	6	63	49	22	48	50	0,55	A	3,0	RNHX 1204 M0E...	◈
181128900	080A35190-07-07-027050	7	80	60	27	60	50	0,78	A	3,0	RNHX 1204 M0E...	◈

◈ Stock item | Produto de stock | Itens de stock ◯ Available under request (see page A-6) | Disponível sobre consulta (consulte a página A-6) | Disponible bajo consulta (mire pagina A-6)



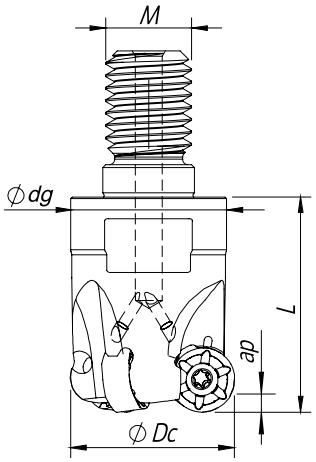

Threaded Coupling

γ_p=-7°

Order code Código	Reference Referência Referencia		Dimensions | Dimensões | Dimensiones (mm)				Kg	Specifications	Insert Pastilha Inserto	Stock
			ØDc	Ød/M	Ødg	L		Ap max (mm)		
181128500	032R35190-03-07-M16040	3	32	M16	29	40	0,16	3,0	RNHX 1204 M0E...	◈
181128700	042R35190-04-07-M16040	4	42	M16	29	40	0,20	3,0	RNHX 1204 M0E...	◯

◈ Stock item | Produto de stock | Itens de stock ◯ Available under request (see page A-6) | Disponível sobre consulta (consulte a página A-6) | Disponible bajo consulta (mire pagina A-6)

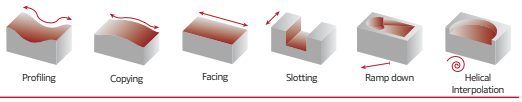



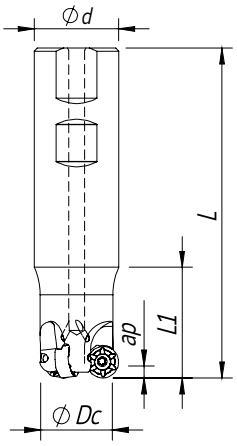

Weldon Shank

γ_p=-7°

Order code Código	Reference Referência Referencia		Dimensions | Dimensões | Dimensiones (mm)				Kg	Specifications	Insert Pastilha Inserto	Stock
			ØDc	Ød/M	L	L1		Ap max (mm)		
181087000	032W35190-03-07-032125	3	32	32	125	42	0,98	3,0	RNHX 1204 M0E...	◈

◈ Stock item | Produto de stock | Itens de stock ◯ Available under request (see page A-6) | Disponível sobre consulta (consulte a página A-6) | Disponible bajo consulta (mire pagina A-6)

RNHX 1204... | Inserts | Pastilhas | Plaquitas

RNHX-LP



RNHX-MP



RNHX-LP | MP

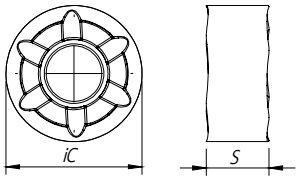

		P						M				K							N		S			H	Dimensions Dimensões Dimensiones (mm)				
		CVD	PVD					CVD	PVD			CVD			PVD				UNC	PCD	CVD	PVD		PVD				
	(2) Grade code	T9	P7	G1	G4	P3	G6	R1	G4	P3	G6	L5	L6	L9	G1	G4	P3	G6	10	D6	R1	P3	G6	P7				
(1) Geometry code	ISO Reference	PH5740	PH7603	PH7910	PH7920	PH7930	PH7740	PHM740	PH7920	PH7930	PH7740	PH5705	PH5320	PH5740	PH7910	PH7920	PH7930	PH7740	PH0910	PDP410	PHM740	PH7930	PH7740	PH7603	IC	S	I	F	B
1112030	RNHX 1204 M0E-LP				◈	◈		◈		◈											◈	◈			12,00	4,76	-	-	-
1112052	RNHX 1204 M0E-MP				◈	◈				◈						◈									12,00	4,76	-	-	-

◈ First choice | Primeira opção | 1ª opción ◈ Stock item | Produto de stock | Itens de stock ◯ Available under request (see page A-7) | Disponível sobre consulta (consulte a página A-7) | Disponible bajo consulta (mire pagina A-7)

Insert order code = (1) Geometry Code + (2) Grade Code

page A-236 page A -244

TOROMILL X2 35190

SPARE PARTS | Complementos | Repuestos

Order separately

Cutter ØDc	Insert Screw	Key (Torx)	Key (Torx - Nm)	Torque Value
35190	P0401065	XT15	DT1530	3,00

Note: The toolholder is supplied with the XT/PT key. To order the DT key please check the page A-243.
Check the procedures for the clamping screws on the page A-243.

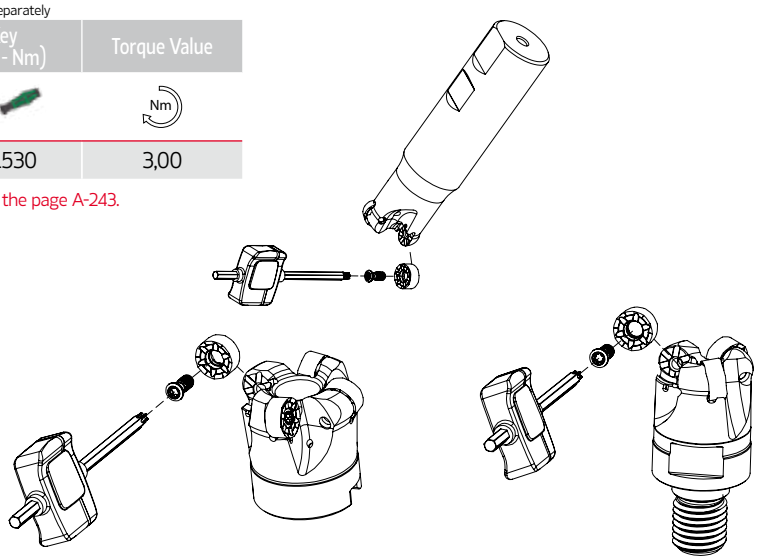

GRADES SELECTION GUIDE | Guia para selecção de graus | Tabla para selección de calidades

ISO	PSM	Material	HB (Brinell)	Grades ← Wear Resistance		Toughness →
				PH7920	PH7930	PHM740
P	1	Unalloyed Steel	125-220	✓	✓	
P	2	Low-Alloyed Steel	220-280	✓	✓	
P	3	High-Alloyed Steel	280-380	✓	✓	
M	4	SS - Ferritic / Martensitic	200-330		✓	✓
M	5	SS - Austenitic	200-330		✓	✓
M	6	SS - Austenitic-ferritic (Duplex)	230-260		✓	✓
K	7	Malleable Cast Iron	130-230	✓		
K	8	Grey Cast Iron	180-245	✓		
K	9	Nodular Cast iron	160-250	✓		
S	11	Heat Resistant Super Alloys	200-320		✓	✓

Good Conditions
Average Conditions
Difficult Conditions

RECOMMENDED CUTTING CONDITIONS | Condições de corte recomendadas | Condiciones de corte recomendables

ISO	PSM	Material	HB (Brinell)	Vc (m/min) ← Wear Resistance		Toughness →	RNHX... 12	
				PH7920	PH7930	PHM740	fz (mm/t)	ap (mm)
P	1	Unalloyed Steel	125-220	150-230	130-210	-	0,15-0,50	0,50-3,00
P	2	Low-Alloyed Steel	220-280	140-220	120-200	-	0,15-0,50	0,50-3,00
P	3	High-Alloyed Steel	280-380	130-180	110-160	-	0,15-0,50	0,50-3,00
M	4	SS - Ferritic / Martensitic	200-330	-	100-120	100-130	0,10-0,35	0,50-3,00
M	5	SS - Austenitic	200-330	-	80-110	80-120	0,10-0,35	0,50-3,00
M	6	SS - Austenitic-ferritic (Duplex)	230-260	-	70-100	70-110	0,10-0,35	0,50-3,00
K	7	Malleable Cast Iron	130-230	-	150-280	-	0,15-0,55	0,50-3,00
K	8	Grey Cast Iron	180-245	-	130-230	-	0,15-0,55	0,50-3,00
K	9	Nodular Cast iron	160-250	-	80-190	-	0,15-0,55	0,50-3,00
S	11	Heat Resistant Super Alloys	200-320	-	20-80	20-90	0,05-0,30	0,50-3,00

CHIP-BREAKER SELECTION GUIDE | Guia para aplicações do quebra-aparas | Guía para aplicación del rompevirutas

ISO	PSM	Material	HB (Brinell)	Chip-Breaker Application	
				1st choise	Dificult Operations
P	1	Unalloyed Steel	125-220	LP	MP
	2	Low-Alloyed Steel	220-280	LP	MP
	3	High-Alloyed Steel	280-380	MP	-
M	4	SS - Ferritic / Martensitic	200-330	LP	-
	5	SS - Austenitic	200-330	LP	-
	6	SS - Austenitic-ferritic (Duplex)	230-260	LP	MP
K	7	Malleable Cast Iron	130-230	MP	-
	8	Grey Cast Iron	180-245	MP	-
	9	Nodular Cast iron	160-250	MP	-
S	11	Heat Resistant Super Alloys	200-320	LP	-

RAMPING | Descida em rampa | Bajada en rampa

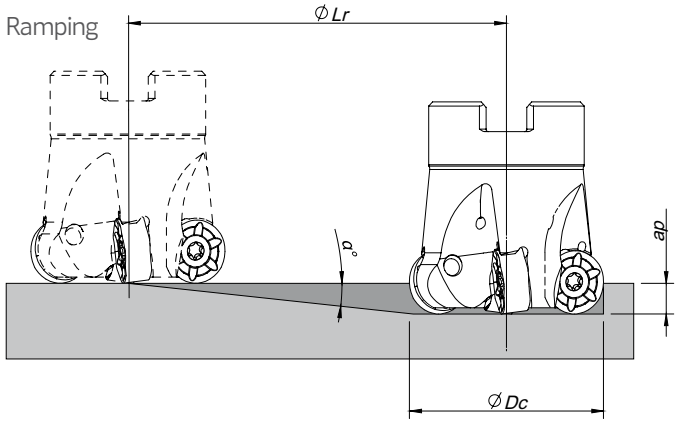

Insert	ØDc	Ramping		
		Max Ramp a°	Max a_p	Min Lr
RNHX 1204	32	1	3	171,9
	40	0,8	3	214,8
	42	0,8	3	214,8
	50	0,8	3	214,8
	63	0,6	3	286,5
	80	0,5	3	343,8

TOROMILL 24590 | 25090 | 25190



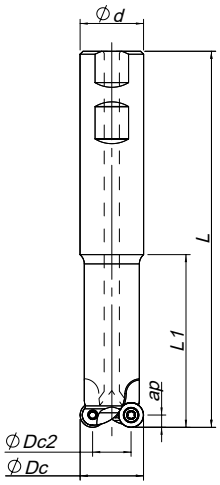

Weldon Shank

γ_p=0°

Order code Código	Reference Referência Referencia		Dimensions | Dimensões | Dimensiones (mm)							Kg	Specifications	Insert Pastilha Inserto	Stock
			ØDc	ØDc2	Ød/M	Ødg	L	L1	L2		Ap max (mm)		
						24590							
181047000	015W24590-02-U016160	2	15	8	16	-	160	60	40	0,220	3,5	RD... 0702...	ⓢ
181047100	015W24590-02-U025220	2	15	8	25	-	220	120	40	0,600	3,5	RD... 0702...	ⓢ
						25090							
181047200	020W25090-02-020160	2	20	10	20	-	160	60	-	0,322	5,0	RD... 1003...	ⓢ
181047300	020W25090-02-025220	2	20	10	25	-	220	120	60	0,610	5,0	RD... 1003...	ⓢ
						25190							
181047400	025W25190-02-025220	2	25	13	25	-	220	120	-	0,678	6,0	RD... 12T3...	ⓢ
181047500	025W25190-02-032230	2	25	13	32	-	230	130	80	1,015	6,0	RD... 12T3...	ⓢ

ⓢ Stock item | Produto de stock | Itens de stock ◯ Available under request (see page A-6) | Disponível sobre consulta (consulte a página A-6) | Disponible bajo consulta (mire pagina A-6)



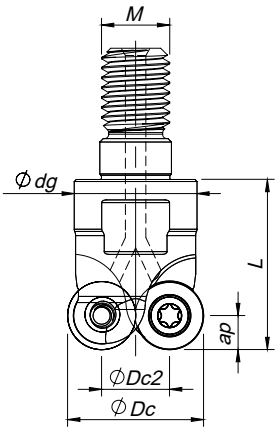

Threaded Coupling

γ_p=0°

Order code Código	Reference Referência Referencia		Dimensions | Dimensões | Dimensiones (mm)					Kg	Specifications	Insert Pastilha Inserto	Stock
			ØDc	ØDc2	Ød/M	Ødg	L		Ap max (mm)		
					24590						
181015400	015R24590-03-M08020	3	15	8	M8	13	20	0,019	3,5	RD... 0702...	ⓢ
181019100	016R24590-02-M08020	2	16	9	M8	13	20	0,019	3,5	RD... 0702...	ⓢ
181037900	016R24590-03-M08020	3	16	9	M8	13	20	0,019	3,5	RD... 0702...	ⓢ
181011400	020R24590-04-M10025	4	20	13	M10	18	25	0,047	3,5	RD... 0702...	ⓢ
					25090						
181011500	020R25090-02-M10025	2	20	10	M10	18	25	0,041	5,0	RD... 1003...	ⓢ
181011600	025R25090-03-M12030	3	25	15	M12	21	30	0,075	5,0	RD... 1003...	ⓢ
181011700	030R25090-04-M16035	4	30	20	M16	29	35	0,190	5,0	RD... 1003...	◯
181015500	035R25090-05-M16043	5	35	25	M16	29	43	0,240	5,0	RD... 1003...	ⓢ
181049900	042R25090-05-M16040	5	42	32	M16	29	40	0,243	5,0	RD... 1003...	ⓢ
					25190						
181011800	024R25190-02-M12032	2	24	12	M12	21	32	0,072	6,0	RD... 12T3...	ⓢ
181011900	035R25190-03-M16042	3	35	23	M16	29	42	0,205	6,0	RD... 12T3...	ⓢ
181012000	042R25190-04-M16042	4	42	30	M16	29	42	0,232	6,0	RD... 12T3...	ⓢ

ⓢ Stock item | Produto de stock | Itens de stock ◯ Available under request (see page A-6) | Disponível sobre consulta (consulte a página A-6) | Disponible bajo consulta (mire pagina A-6)



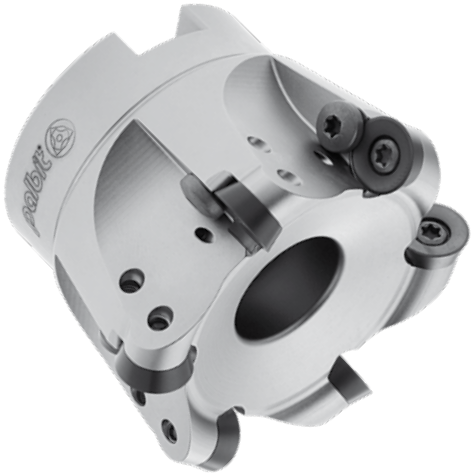

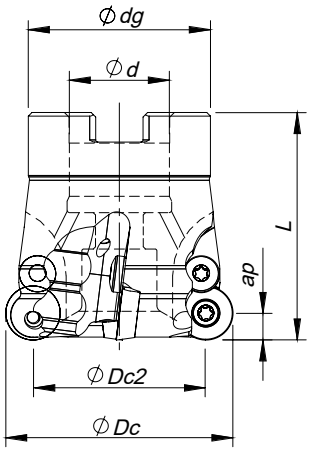

Arbor Mounting

γ_p=0° (*+7°)

Order code Código	Reference Referência Referencia		Dimensions | Dimensões | Dimensiones (mm)					Kg	Specifications		Insert Pastilha Inserto	Stock
			ØDc	ØDc2	Ød/M	Ødg	L		Arbor Type	Ap max (mm)		
					25090							
181010600	042A25090-06-016044	6	42	32	16	36	44	0,254	A	5,0	RD... 1003...	◎
181017500	052A25090-07-022050	7	52	42	22	40	50	0,395	A	5,0	RD... 1003...	◎
					25190							
181051900	050C25190-05-07-022050*	5	50	38	22	40	50	0,312	A	6,0	RD... 12T3...	◎
181010700	052C25190-05-022050	5	52	40	22	40	50	0,337	A	6,0	RD... 12T3...	◎
181010800	052C25190-05-07-022050*	5	52	40	22	40	50	0,335	A	6,0	RD... 12T3...	◎
181016100	066C25190-06-027050	6	66	54	27	48	50	0,550	A	6,0	RD... 12T3...	◎
181010900	066C25190-06-07-027050*	6	66	54	27	48	50	0,600	A	6,0	RD... 12T3...	◎
181016500	080C25190-07-027050	7	80	68	27	60	50	1,000	A	6,0	RD... 12T3...	◎
181016600	080C25190-07-07-027052*	7	80	68	27	60	52,5	1,000	A	6,0	RD... 12T3...	◎

◎ Stock item | Produto de stock | Itens de stock

○ Available under request (see page A-6) | Disponível sobre consulta (consulte a página A-6) | Disponible bajo consulta (mire pagina A-6)

SPARE PARTS | Complementos | Repuestos

Cutter ØDc	Order separately: Insert Screw	Key (Torx)	Key (Torx - Nm)	Torque Value	Order separately: Screw Clamp	Washer	Washer Screw
W24590 - 15	P0250503	XT08	DT0812	1,2	-	-	-
R24590 - 15-20	P0250503	XT08	DT0812	1,2	-	-	-
W25090 - 20	P0350800	XT15	DT1530	3,0	-	-	-
R25090 - 20-42	P0350800	XT15	DT1530	3,0	-	-	-
A25090 - 42-52	P0350800	XT15	DT1530	3,0	-	-	-
W25190 - 25	P0350800	XT15	DT1530	3,0	-	-	-
R25190 - 24-42	P0350800	XT15	DT1530	3,0	-	-	-
C25190 - 50-80	P0350800	XT15	DT1530	3,0	P0350750	-	-

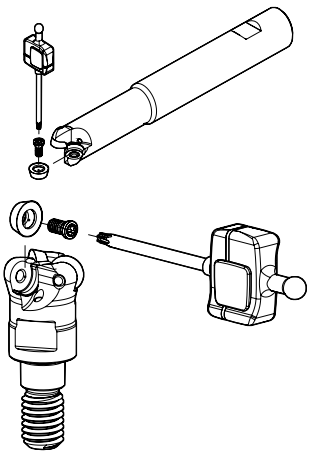

Note: The toolholder is supplied with the XT/PT key. To order the DT key please check the page A-243.
Check the procedures for the clamping screws on the page A-243.

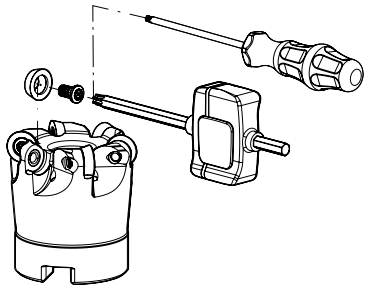

page A-236
page A -244

TOROMILL 25290 | 25390



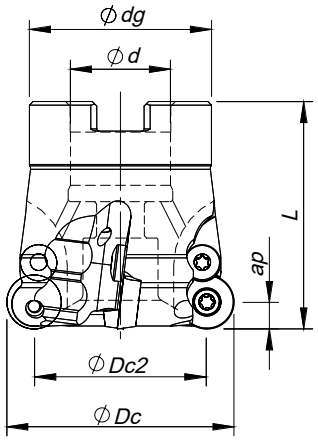

Arbor Mounting

γ_p=0° (*+7°)

Order code Código	Reference Referência Referencia		Dimensions | Dimensões | Dimensiones (mm)					Kg	Specifications		Insert Pastilha Inserto	Stock
			ØDc	ØDc2	Ød/M	Ødg	L		Arbor Type	Ap max (mm)		
25290												
181017900	052C25290-04-022050	4	52	36	22	40	50	0,305	A	8,0	RD... 1604...	◈
181018000	052C25290-04-07-022050*	4	52	36	22	40	50	0,324	A	8,0	RD... 1604...	◈
181011000	066C25290-05-027050	5	66	50	27	48	50	0,550	A	8,0	RD... 1604...	◈
181016700	066C25290-05-07-027050*	5	66	50	27	48	50	0,550	A	8,0	RD... 1604...	◈
181016200	080C25290-06-027052	6	80	64	27	60	52	0,910	A	8,0	RD... 1604...	◈
181011100	080C25290-06-07-027052*	6	80	64	27	60	52	0,934	A	8,0	RD... 1604...	◈
181017300	125C25290-08-07-U040052*	8	125	109	40	90	52	2,340	B	8,0	RD... 1604...	◈
181017400	160C25290-09-07-U040052*	9	160	144	40	120	52	4,750	B	8,0	RD... 1604...	◈
25390												
181026400	080C25390-05-07-027050*	5	80	60	27	60	50	0,840	A	10,0	RD... 2006...	◈
181016800	100C25390-06-07-U032052*	6	100	80	32	70	52	1,180	B	10,0	RD... 2006...	◈
181020500	125C25390-07-07-U040052*	7	125	105	40	90	52	2,030	B	10,0	RD... 2006...	◈
181020600	160C25390-08-07-U040052*	8	160	140	40	120	52	4,320	B	10,0	RD... 2006...	◈

◈ Stock item | Produto de stock | Itens de stock

◯ Available under request (see page A-6) | Disponível sobre consulta (consulte a página A-6) | Disponible bajo consulta (mire pagina A-6)



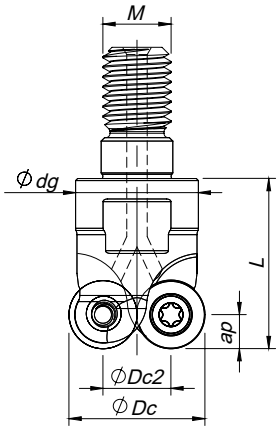

Threaded Coupling

γ_p=0°

Order code Código	Reference Referência Referencia		Dimensions | Dimensões | Dimensiones (mm)					Kg	Specifications	Insert Pastilha Inserto	Stock
			ØDc	ØDc2	Ød/M	Ødg	L		Ap max (mm)		
25290											
181002600	032R25290-02-M16040	2	32	16	M16	29	40	0,162	8,0	RD... 1604...	◈
181034800	032R25290-03-M16042	3	35	19	M16	29	42	0,230	8,0	RD... 1604...	◯

◈ Stock item | Produto de stock | Itens de stock

◯ Available under request (see page A-6) | Disponível sobre consulta (consulte a página A-6) | Disponible bajo consulta (mire pagina A-6)



RD... | Inserts | Pastilhas | Plaquitas

RDHT

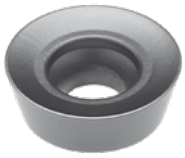

RDHW



RDMT

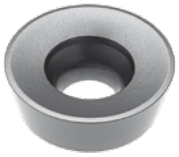

RDMW

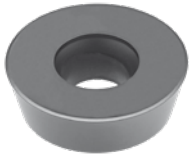

RDHT | RDHW | RDMT | RDMW

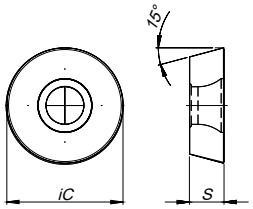

		P							M		K						N		S		H	Dimensions Dimensões Dimensiones (mm)					
		CVD	PVD						PVD		CVD		PVD				UNC	PCD	PVD		PVD						
	(2) Grade code	T9	M6	54	68	78	86	I5	68	66	L5	L6	54	68	66	I5	10	D6	66	I5	M6						
(1) Geometry code	ISO Reference	PHS740	PH6103	PH6910	PH6920	PH6125	PH6135	PH6740	PH6920	PH6930	PH5705	PH5320	PH6910	PH6920	PH6930	PH6740	PH0910	PDP410	PH6930	PH6740	PH6103	iC	S	I	F	B	R
1110548	RDHW 0702 M0T		◈	◈	◈								◈	◈							◈	7,00	2,38	-	-	-	-
1110961	RDHW 0702 M0F																	○				7,00	2,38	-	-	-	-
1110087	RDHW 1003 M0T		◈	◈	◈		◈						◈	◈							◈	10,00	3,18	-	-	-	-
1110962	RDHW 1003 M0F																	○				10,00	3,18	-	-	-	-
1110082	RDHT 1003 M0T					◈	◈															10,00	3,18	-	-	-	-
1110583	RDMT 1003 M0T					◈	◈															10,00	3,18	-	-	-	-
1110549	RDMW 1003 M0T				◈	◈	◈							◈								10,00	3,18	-	-	-	-
1110090	RDHW 12T3 M0T		◈	◈	◈		◈						◈	◈							◈	12,00	3,97	-	-	-	-
1112040	RDHT 12T3 M0S-MP				◈		○	◈						◈		◈						12,00	3,97	-	-	-	-
1110083	RDHT 12T3 M0T					◈	◈															12,00	3,97	-	-	-	-
1110558	RDMT 12T3 M0T					◈	◈															12,00	3,97	-	-	-	-
1110096	RDMW 12T3 M0T				◈	◈	◈							◈								12,00	3,97	-	-	-	-
1110092	RDHW 1604 M0T		◈	◈	◈		◈						◈	◈							◈	16,00	4,76	-	-	-	-
1112039	RDHT 1604 M0S-MP				◈		○	◈						◈		◈						16,00	4,76	-	-	-	-
1110084	RDHT 1604 M0T					◈	◈															16,00	4,76	-	-	-	-
1110556	RDMT 1604 M0T					◈	◈															16,00	4,76	-	-	-	-
1110097	RDMW 1604 M0T				◈	◈	◈							◈								16,00	4,76	-	-	-	-
1111217	RDHW 2006 M0T				○	○	○															20,00	6,35	-	-	-	-
1110672	RDHT 2006 M0T					○	○															20,00	6,35	-	-	-	-
1110659	RDMT 2006 M0T					◈	◈															20,00	6,35	-	-	-	-
1110869	RDMW 2006 M0T					◈	◈															20,00	6,35	-	-	-	-

◈ First choice | Primeira opção | 1ª opción ◈ Stock item | Produto de stock | Itens de stock ○ Available under request (see page A-7) | Disponível sobre consulta (consulte a página A-7) | Disponible bajo consulta (mire pagina A-7)

Insert order code = (1) Geometry Code + (2) Grade Code

page A-236 page A -244

TOROMILL 24590 | 25090 | 25190 | 25290 | 25390

SPARE PARTS | Complementos | Repuestos

Cutter ØDc	Insert Screw	Key (Torx)	Key (Torx - Nm) (Order separately)	Torque Value	Screw Clamp (Order separately)	Washer (Order separately)	Washer Screw (Order separately)
W24590 - 15	P0250503	XT08	DT0812	1,2	-	-	-
R24590 - 15-20	P0250503	XT08	DT0812	1,2	-	-	-
W25090 - 20	P0350800	XT15	DT1530	3,0	-	-	-
R25090 - 20-42	P0350800	XT15	DT1530	3,0	-	-	-
A25090 - 42-52	P0350800	XT15	DT1530	3,0	-	-	-
W25190 - 25	P0350800	XT15	DT1530	3,0	-	-	-
R25190 - 24-42	P0350800	XT15	DT1530	3,0	-	-	-
C25190 - 50-80	P0350800	XT15	DT1530	3,0	P0350750	-	-
R25290 - 32-35	P0451001	XT20	DT2050	5,0	-	-	-
C25290 - 52-80	P0451001	XT20	DT2050	5,0	-	HC01200	P0451001
C25290 - 125-160	P0451001	XT20	DT2050	5,0	-	HC01200	P0451001
C25390 - 80-160	P0601402	TT20	-	10,0	-	HC01200	P0451001

Note: The toolholder is supplied with the XT/PT key. To order the DT key please check the page A-243.
Check the procedures for the clamping screws on the page A-243.

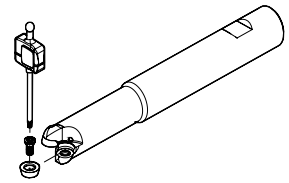

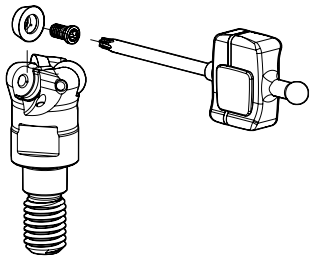

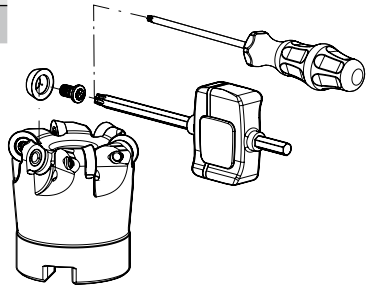

GRADES SELECTION GUIDE | Guia para selecção de graus | Tabla para selección de calidades

ISO	PSM	Material	HB (Brinell)	Grades ← Wear Resistance — Toughness → PH6103	PH6910	PH6920	PH6125	PH6135	PH6740	PDP410
P	1	Unalloyed Steel	125-220	✓	✓	✓	✓	✓	✓	
	2	Low-Alloyed Steel	220-280	✓	✓	✓	✓	✓	✓	
	3	High-Alloyed Steel	280-380	✓	✓	✓	✓	✓	✓	
K	7	Malleable Cast Iron	130-230		✓	✓			✓	
	8	Grey Cast Iron	180-245		✓	✓			✓	
	9	Nodular Cast iron	160-250		✓	✓			✓	
N	10	Aluminium and Non Ferrous	30-130							✓
H	12	Hardened Steels	40-55 HRC	✓						

Good Conditions
Average Conditions
Difficult Conditions

CHIP-BREAKER SELECTION GUIDE | Guia para aplicações do quebra-aparas | Guía para aplicación del rompevirutas

ISO	PSM	Material	HB (Brinell)	Chip-Breaker Application	
				1st choise	Dificult Operations
P	1	Unalloyed Steel	125-220	RD...T ...	RD...W ...
	2	Low-Alloyed Steel	220-280	RD...T ...	-
	3	High-Alloyed Steel	280-380	RD...W ...	-
K	7	Malleable Cast Iron	130-230	RD...T ...	RD...W ...
	8	Grey Cast Iron	180-245	RD...W ...	-
	9	Nodular Cast iron	160-250	RD...W ...	-
N	10	Aluminium and Non Ferrous	30-130	RD...W ... M0F	-
H	12	Hardened Steels	40-55 HRC	RD...W ...	-

RECOMMENDED CUTTING CONDITIONS | Condições de corte recomendadas | Condiciones de corte recomendables

Insert	Feed f_z (mm/t)								
	0,20-0,50	0,50-1,00	2,00	3,00	4,00	5,00	6,00	7,00	8,00
RD... 07	0,35	0,25	0,10	0,07	-	-	-	-	-
RD... 10	-	0,40	0,35	0,30	0,20	-	-	-	-
RD... 12	-	0,50	0,45	0,30	0,25	0,22	-	-	-
RD... 16	-	0,60	0,50	0,45	0,35	0,30	0,20	0,10	-
RD... 20	-	-	0,60	0,50	0,40	0,30	0,25	0,15	0,10

page A-236 page A -244

TOROMILL 24590 | 25090 | 25190 | 25290 | 25390

RECOMMENDED CUTTING CONDITIONS | Condições de corte recomendadas | Condiciones de corte recomendables

ISO	PSM	Material	HB (Brinell)	Vc (m/min) ← Wear Resistance					Toughness →
				PH6103	PH6910	PH6920	PH6125	PH6135	PH6740
P	1	Unalloyed Steel	125-220	180-300	180-250	150-230	160-190	150-180	130-160
	2	Low-Alloyed Steel	220-280	180-250	170-210	140-220	140-180	140-170	120-150
	3	High-Alloyed Steel	280-380	180-230	160-200	130-180	130-160	120-150	100-130
K	7	Malleable Cast Iron	130-230	-	170-300	150-280	-	-	130-250
	8	Grey Cast Iron	180-245	-	150-250	130-230	-	-	110-220
	9	Nodular Cast iron	160-250	-	90-210	80-190	-	-	80-170
N	10	Aluminium and Non Ferrous	30-130	-	-	-	-	-	-
H	12	Hardened Steels	40-55 HRC	120-240	-	-	-	-	-

ISO	PSM	Material	HB (Brinell)	RD... 07		RD... 10		RD... 12	
				fz (mm/t)	ap (mm)	fz (mm/t)	ap (mm)	fz (mm/t)	ap (mm)
P	1	Unalloyed Steel	125-220	≤0,18	≤1,50	≤0,24	≤2,50	≤0,27	≤2,50
	2	Low-Alloyed Steel	220-280	≤0,18	≤1,50	≤0,24	≤2,50	≤0,25	≤2,50
	3	High-Alloyed Steel	280-380	≤0,15	≤1,50	≤0,21	≤2,50	≤0,20	≤2,50
K	7	Malleable Cast Iron	130-230	≤0,20	≤1,50	≤0,25	≤2,50	≤0,24	≤2,50
	8	Grey Cast Iron	180-245	≤0,20	≤1,50	≤0,25	≤2,50	≤0,24	≤2,50
	9	Nodular Cast iron	160-250	≤0,18	≤1,50	≤0,22	≤2,50	≤0,22	≤2,50
N	10	Aluminium and Non Ferrous	30-130	≤0,45	≤1,50	≤0,80	≤2,50	-	-
H	12	Hardened Steels	40-55 HRC	≤0,12	≤1,50	≤0,18	≤2,50	≤0,18	≤2,50

ISO	PSM	Material	HB (Brinell)	RD... 16		RD... 20	
				fz (mm/t)	ap (mm)	fz (mm/t)	ap (mm)
P	1	Unalloyed Steel	125-220	≤0,33	≤3,50	≤0,33	≤5,00
	2	Low-Alloyed Steel	220-280	≤0,33	≤3,50	≤0,33	≤5,00
	3	High-Alloyed Steel	280-380	≤0,27	≤3,50	≤0,27	≤5,00
K	7	Malleable Cast Iron	130-230	≤0,35	≤3,50	≤0,35	≤5,00
	8	Grey Cast Iron	180-245	≤0,35	≤3,50	≤0,35	≤5,00
	9	Nodular Cast iron	160-250	≤0,32	≤3,50	≤0,32	≤5,00
N	10	Aluminium and Non Ferrous	30-130	-	-	-	-
H	12	Hardened Steels	40-55 HRC	≤0,25	≤3,50	≤0,20	≤5,00

(Note 1) Cutting conditions $a_e/Dc=70\%$.
(Note 2) Cutting conditions should be adjusted according to the machine and work rigidity.
(Note 3) It's possible to occur vibrations in certain cases. Please reduce depth of cut and / or reduce cutting conditions in following cases:
- When using long shank;
- When using long tool overhang with arbor type;
- When application has poor clamping rigidity or when using a low rigidity machine.

RAMPING AND HELICAL INTERPOLATION

Descida em rampa e interpolação helicoidal | Bajada en rampa e interpolación circular

Ramping

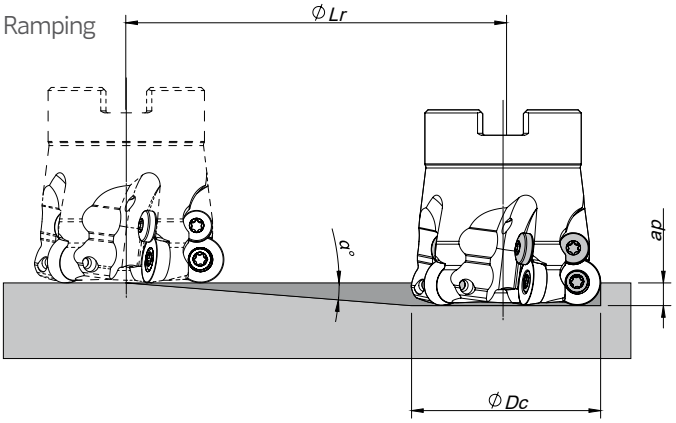

Helical Interpolation

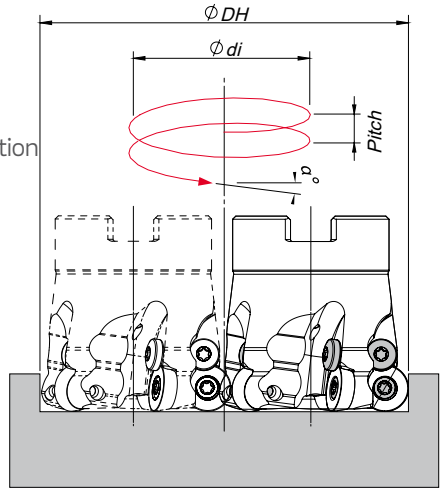

Blind hole
Flat bottom

Ødi = ØDH - ØDc

Insert	ØDc	Ramping			Helical Interpolation		
		Max Ramp a°	Max a_p	Min Lr	ØDHmin	ØDHmax	Max Pitch/Rev.
RD... 07	15	9,4	3,5	21,1	23,0 -	- 30,0	4,0 7,0
	16	8	3,5	24,9	25,0 -	- 32,0	3,0 7,0
	20	6	3,5	33,3	33,0 -	- 40,0	4,0 6,0
RD... 10	20	25,0	5,0	10,7	30,0 -	- 40,0	14,0 29,0
	25	22,0	5,0	12,4	40,0 -	- 50,0	19,0 31,0
	30	13,5	5,0	20,8	50,0 -	- 60,0	15,0 22,0
	35	12,0	5,0	23,5	60,0 -	- 70,0	16,0 23,0
	42	10,0	5,0	28,4	74,0 -	- 84,0	17,0 23,0
	52	7,0	5,0	40,7	94,0 -	- 104,0	16,0 20,0
RD... 12	24	17,0	6,0	19,6	36,0 -	- 48,0	11,1 23,0
	25	16,2	6,0	20,7	38,0 -	- 50,0	11,0 22,0
	35	12,0	6,0	28,2	58,0 -	- 70,0	15,0 23,0
	42	10,3	6,0	33,0	72,0 -	- 84,0	17,0 23,0
	50	6,4	6,0	53,5	88,0 -	- 100,0	13,0 17,0
	52	6,0	6,0	57,1	92,0 -	- 104,0	13,0 17,0
	66	3,5	6,0	79,8	120,0 -	- 132,0	12,0 15,0
	80	2,5	6,0	104,1	148,0 -	- 160,0	12,0 14,0
RD... 16	32	20,0	8,0	22,0	48,0 -	- 64,0	18,0 36,0
	35	18,0	8,0	24,6	54,0 -	- 70,0	19,0 35,0
	52	13,0	8,0	34,7	88,0 -	- 104,0	26,0 37,0
	66	8,5	8,0	53,5	116,0 -	- 132,0	23,0 30,0
	80	6,0	8,0	76,1	144,0 -	- 160,0	21,0 26,0
	125	3,5	8,0	130,8	234,0 -	- 250,0	20,0 24,0
	160	2,5	8,0	183,2	304,0 -	- 320,0	19,0 21,0
RD... 20	80	6,0	10,0	76,1	140,0 -	- 160,0	19,0 26,0
	100	5,0	10,0	91,4	180,0 -	- 200,0	21,0 27,0
	125	4,5	10,0	101,6	230,0 -	- 250,0	25,0 30,0
	160	3,0	10,0	152,6	300,0 -	- 320,0	23,0 26,0

Note: During helical interpolation do not exceed max Pitch.

page A-236 page A -244

LINEPRO 40095 | 40595 | 41095



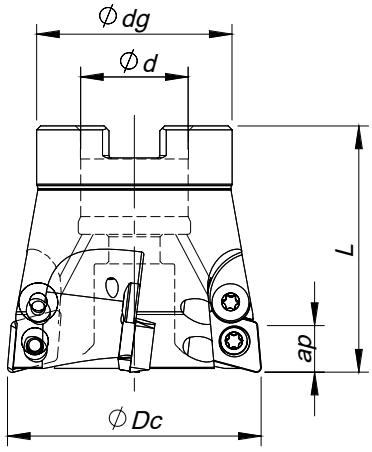

Arbor Mouting

K_r=95° | γ_p=+7°

Order code Código	Reference Referência Referencia		Dimensions | Dimensões | Dimensiones (mm)				Kg	Specifications		Insert Pastilha Inserto	Stock
			ØDc	Ød/M	Ødg	L		Arbor Type	Ap max (mm)		
40595											
181027700	052C40595-05-07-022050	5	52	22	40	50	0,342	A	1,0	XD... 10T3...	◉
181027800	066C40595-06-07-027050	6	66	27	48	50	0,565	A	1,0	XD... 10T3...	◉
181027900	080C40595-07-07-027050	7	80	27	60	50	0,972	A	1,0	XD... 10T3...	◉

◉ Stock item | Produto de stock | Itens de stock ○ Available under request (see page A-6) | Disponível sobre consulta (consulte a página A-6) | Disponible bajo consulta (mire pagina A-6)



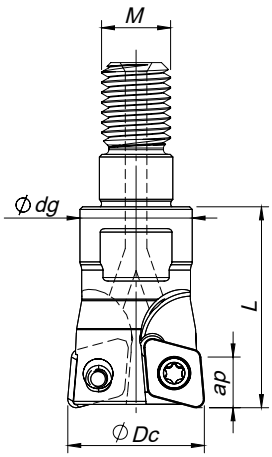

Threaded Coupling

K_r=95° | γ_p=+7° (*+9)

Order code Código	Reference Referência Referencia		Dimensions | Dimensões | Dimensiones (mm)				Kg	Specifications	Insert Pastilha Inserto	Stock
			ØDc	Ød/M	Ødg	L		Ap max (mm)		
41095										
181012400	010R41095-02-09-M06020*	2	10	M6	9,8	20	0,010	0,8	XD... 0401...	◉
181016300	012R41095-02-09-M06020*	2	12	M6	9,8	20	0,012	0,8	XD... 0401...	◉
40095										
181012100	016R40095-02-07-M08023	2	16	M8	13	23	0,022	1,0	XD... 0602...	◉
181012200	020R40095-03-07-M10028	3	20	M10	18	28	0,050	1,0	XD... 0602...	◉
181015600	025R40095-03-07-M12030	3	25	M12	21	30	0,081	1,0	XD... 0602...	◉
181034000	025R40095-04-07-M12030	4	25	M12	21	30	0,078	1,0	XD... 0602...	◉
40595										
181015700	025R40595-02-07-M12035	2	25	M12	21	35	0,077	1,0	XD... 10T3...	◉
181012300	035R40595-03-07-M16043	3	35	M16	29	43	0,200	1,0	XD... 10T3...	◉
181016900	042R40595-04-07-M16043	4	42	M16	29	43	0,230	1,0	XD... 10T3...	◉

◉ Stock item | Produto de stock | Itens de stock ○ Available under request (see page A-6) | Disponível sobre consulta (consulte a página A-6) | Disponible bajo consulta (mire pagina A-6)

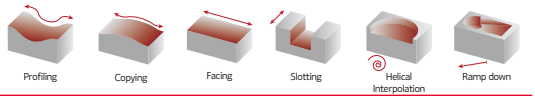

XDHW | Inserts | Pastilhas | Plaquitas

XDHW



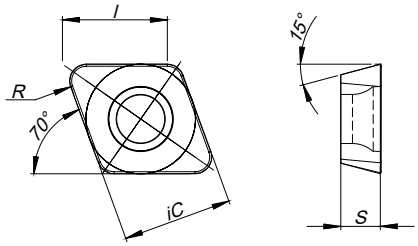

XDHW - PCD & PCBN
(HARDMILL)

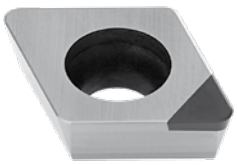

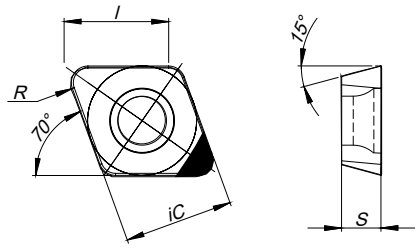

		P						M									N		S		H			Dimensions Dimensões Dimensiones (mm)					
		CVD	PVD					CVD	PVD					PVD			CVD	PCD	PVD		PVD	PCBN							
	(2) Grade code	T9	M6	54	68	78	86	R1	68	66	L6	L9	54	68	78	I5	P2	D6	66	I5	M6	S6	D4						
(1) Geometry code	ISO Reference	PHS740	PH6103	PH6910	PH6920	PH6125	PH6135	PHM740	PH6920	PH6930	PH5320	PH5740	PH6910	PH6920	PH6125	PH6740	PHD103	PDP410	PH6930	PH6740	PH6103	PBL603	PBH910	iC	S	l	F	B	R
1110905	XDHW 040105		○	○		○							○	○			◈				○			4,00	1,59	4,00	-	-	0,50
1110573	XDHW 040110		◈	◈		◈							◈	○	◈		◈				◈			4,00	1,59	4,00	-	-	1,00
1112316	XDHW 040110 FN																	◈						4,00	1,59	4,00	-	-	1,00
1112317	XDHW 040110 TN																						◈	4,00	1,59	4,00	-	-	1,00
1110532	XDHW 060210		◈	◈		◈	◈						◈	○	◈		◈				◈			6,50	2,38	6,20	-	-	1,00
1112318	XDHW 060210 FN																	◈						6,50	2,38	6,20	-	-	1,00
1111875	XDHW 060210 TN																						◈	6,50	2,38	6,20	-	-	1,00
1110565	XDHW 10T310		◈	◈		◈	◈						◈	○	◈		○				◈			10,00	3,97	9,90	-	-	1,00
1112320	XDHW 10T310 FN																	◈						10,00	3,97	9,90	-	-	1,00
1112321	XDHW 10T310 TN																						◈	10,00	3,97	9,90	-	-	1,00

◈ First choice | Primeira opção | 1ª opción ◈ Stock item | Produto de stock | Itens de stock ○ Available under request (see page A-7) | Disponível sobre consulta (consulte a página A-7) | Disponible bajo consulta (mire pagina A-7)

Insert order code = (1) Geometry Code + (2) Grade Code

page A-236 page A -244

LINEPRO 40095 | 40595 | 41095

SPARE PARTS | Complementos | Repuestos

Cutter ØDc	Insert Screw	Key (Torx)	Order separately Key (Torx - Nm)	Torque Value	Order separately Screw Clamp
R41095 – 10 - 12	P0180401	XT06	DT0606	0,6	-
R40095 – 16 - 25	P0250503	XT08	DT0812	1,2	-
R40595 – 25 - 42	P0350800	XT15	DT1530	3,0	-
C40595 – 52 - 80	P0350800	XT15	DT1530	3,0	P0350750

Note: The toolholder is supplied with the XT/PT key. To order the DT key please check the page A-243.
Check the procedures for the clamping screws on the page A-243.

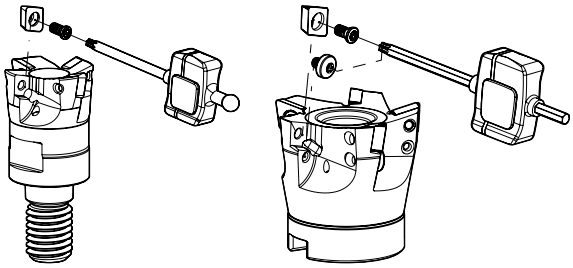

GRADES SELECTION GUIDE | Guia para selecção de graus | Tabla para selección de calidades

ISO	PSM	Material	HB (Brinell)	Grades ← Wear Resistance Toughness → PHD103	PH6103	PH6910	PH6125	PH6135	PCD PDP410	PCBN PBH910
P	1	Unalloyed Steel	125-220		✓	✓	✓	✓		
	2	Low-Alloyed Steel	220-280		✓	✓	✓	✓		
	3	High-Alloyed Steel	280-380		✓	✓	✓	✓		
K	7	Malleable Cast Iron	130-230				✓			
	8	Grey Cast Iron	180-245				✓			
	9	Nodular Cast iron	160-250				✓			
N	10	Aluminium and Non Ferrous	30-130	✓					✓	
H	12	Hardened Steels	40-55 HRC		✓					✓

Good Conditions
Average Conditions
Difficult Conditions

RECOMMENDED CUTTING CONDITIONS | Condições de corte recomendadas | Condiciones de corte recomendables

ISO	PSM	Material	HB (Brinell)	Vc (m/min) ← Wear Resistance Toughness → PHD103	PH6103	PH6910	PH6125	PH6135	PCD PDP410	PCBN PBH910
P	1	Unalloyed Steel	125-220	-	180-300	180-250	160-190	150-180	-	-
	2	Low-Alloyed Steel	220-280	-	180-250	170-210	140-180	140-170	-	-
	3	High-Alloyed Steel	280-380	-	180-230	160-200	130-160	120-150	-	-
K	7	Malleable Cast Iron	130-230	-	-	170-300	160-290	-	-	-
	8	Grey Cast Iron	180-245	-	-	150-250	140-240	-	-	-
	9	Nodular Cast iron	160-250	-	-	90-210	80-200	-	-	-
N	10	Aluminium and Non Ferrous	30-130	300-1000	-	-	-	-	800-3000	-
H	12	Hardened Steels	40-55 HRC	-	120-260	-	-	-	-	200-600

Insert	Feed f_Z (mm/t) Roughing	Finishing	a_p Rec.
XD... 04	0.10-0.20	0.10-0.15	0.1-0.5
XD... 06	0.15-0.30	0.10-0.25	0.2-0.8
XD... 10	0.15-0.35	0.10-0.30	0.2-0.8

(Note 1) Cutting conditions should be ajusted according to the machine and work rigidity.
(Note 2) If chattering occurs, reduce ap and Vc by 30% and keep the same fz per tooth.

RAMPING AND HELICAL INTERPOLATION

Descida em rampa e interpolação helicoidal | Bajada en rampa e interpolación circular

Ramping

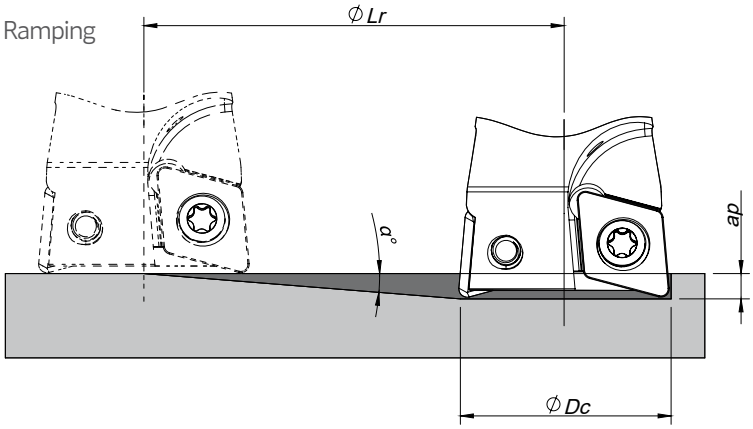

Helical Interpolation

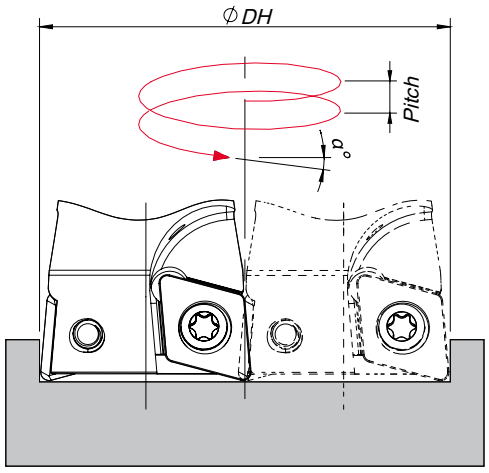

Blind hole
Flat bottom

Ødi = ØDH - ØDc

Insert	ØDc	Ramping			Helical Interpolation		
		Max Ramp a°	Max a_p	Min Lr	ØDHmin	ØDHmax	Max Pitch/Rev.
XDHW 04...	10	7,3	0,8	6,2	18,0	-	3,2
					-	20,0	4,0
	12	5,3	0,8	8,6	22,0	-	2,9
					-	24,0	3,5
XDHW 06...	16	8	1,0	7,1	30,0	-	6,2
					-	32,0	7,1
	20	5,7	1,0	10,0	38,0	-	5,6
					-	40,0	6,3
	25	4	1,0	14,3	48,0	-	5,1
					-	50,0	5,5
XDHW 10...	25	8,7	1,0	6,5	48,0	-	11,1
					-	50,0	12,0
	35	5,2	1,0	11,0	68,0	-	9,4
					-	70,0	10,0
	42	4	1,0	14,3	82,0	-	8,8
					-	84,0	9,2
	52	3	1,0	19,1	102,0	-	8,2
					-	104,0	8,6
	66	2,3	1,0	24,9	130,0	-	8,1
					-	132,0	8,3
	80	1,8	1,0	31,8	158,0	-	7,7
					-	160,0	7,9

Note: During helical interpolation do not exceed max Pitch.

page A-236
page A -244

HARDMILL 72090

INSERTS CODIFICATION SYSTEM ‖ Sistema de codificação de pastilhas | Sistema de codificación de insertos

ISO CODE	Insert size	Insert thickness	Insert radius	Cutting edge position angle	Cutting edge relief angle	Cutting edge conditions	Cut direction		Wiper edge lenght (mm)	Máx. Ap (mm)
XNHW	12	05	04	P	Z	F	R	-	015	030

PCD RANGE ‖ Gama de produtos PCD | Rango de productos PCD



XNHW 120504 PZFR-0150045



XNHW 120504 PZFR-000080

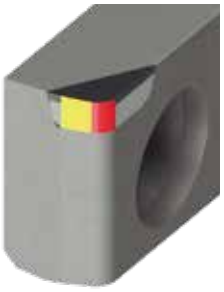

XNHW 120508 PZFR-015045



XNHW 120508 PZTR-015045



XNHW 120508 PZTR-000080



XNHW 1205 PZFR-020120

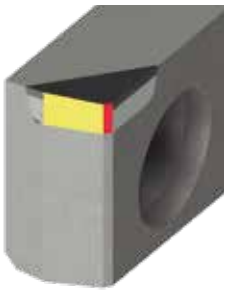

XNHW 1205 PZFR-030045

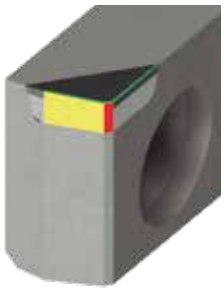

XNHW 1205 PZTR-030045

Cutting edge Type (radius, chamfer)

Wipper cutting edge

Edge Preparation (F, T)

HARDMILL

NEW

PCD | PCBN



XNHW 1205
PZFR-020120



XNHW 120508
PZTR-000080



XNHW 120508
PZTR-015045



page A-236
page A -244

HARDMILL 72090



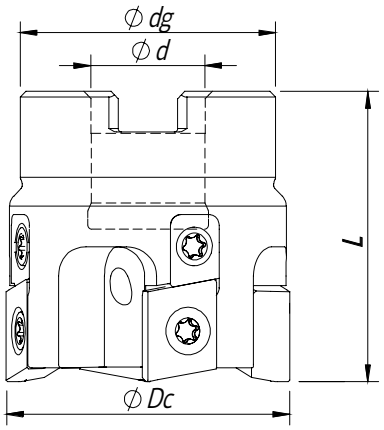

Arbor Mounting

K_r=90° | γ_p=0°

Order code Código	Reference Referência Referencia		Dimensions | Dimensões | Dimensiones (mm)				Kg	Specifications		Insert Pastilha Inserto	Stock
			ØDc	Ød	Ødg	L		Arbor Type	N max (mm)		
181129700	040A72090-04-016040	4	40	16	36	40	0,32	A	32 000	XNHW 1205...	◉
181129800	050A72090-04-022040	4	50	22	46	40	0,38	A	32 000	XNHW 1205...	◉
181129900	050A72090-05-022040	5	50	22	46	40	0,37	A	32 000	XNHW 1205...	○
181130000	063A72090-04-022040	4	63	22	49	40	0,65	A	29 000	XNHW 1205...	○
181130100	063A72090-07-022040	7	63	22	49	40	0,62	A	29 000	XNHW 1205...	◉
181130200	080A72090-05-027050	5	80	27	60	50	1,25	A	26 000	XNHW 1205...	◉
181130300	080A72090-09-027050	9	80	27	60	50	1,17	A	26 000	XNHW 1205...	◉
181130400	100A72090-06-032050	6	100	32	70	50	1,93	A	24 000	XNHW 1205...	◉
181130500	100A72090-12-032050	12	100	32	70	50	1,80	A	24 000	XNHW 1205...	○
181130600	125A72090-08-040063	8	125	40	72	63	2,88	A	22 000	XNHW 1205...	○
181130700	125A72090-14-040063	14	125	40	72	63	2,60	A	22 000	XNHW 1205...	○
181135500	160A72090-10-040063	10	160	40	72	63	3,30	A	18 000	XNHW 1205...	○
181135600	160A72090-16-040063	16	160	40	118	63	5,45	A	18 000	XNHW 1205...	○

◉ Stock item | Produto de stock | Itens de stock

○ Available under request (see page A-6) | Disponível sobre consulta (consulte a página A-6) | Disponible bajo consulta (mire pagina A-6)

SPARE PARTS | Complementos | Repuestos

Order separately

Cutter ØDc	Insert Screw	Key (Torx)	Key (Torx - Nm)	Torque Value
				
A72090 - 40-160	P0401100	XT15	DT1530	3,00

Note: The toolholder is supplied with the XT/PT key. To order the DT key please check the page A-243.
Check the procedures for the clamping screws on the page A-243.

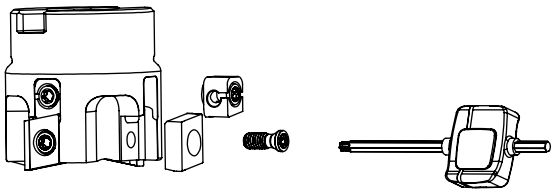

Facing Shouldering

XNHW 1205... | Inserts | Pastilhas | Plaquitas

XNHW 1205 PZFR-020120

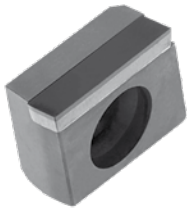

XNHW 120508 PZTR-000080

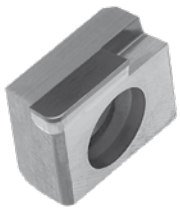

XNHW 120508 PZTR-015045

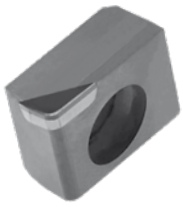

XNHW

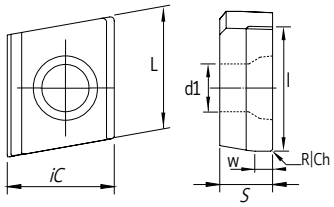

		P			M				K						N			H	
		CVD	PVD		CVD	PVD			PCBN		UNC	PVD			PCD		UNC	PCBN	
	(2) Grade code	T9	P7	G1	R1	G4	P3	G6	S6	D4	10	G4	P3	G6	I3	D6	10	S6	D4
(1) Geometry code	ISO Reference	PHS740	PH7603	PH7910	PHM740	PH7920	PH7930	PH7740	PBL603	PBH910	PH0910	PH7920	PH7930	PH7740	PDP403	PDP410	PH0910	PBL603	PBH910
1112564	XNHW 120504 PZFR-015045														○	○			
1112565	XNHW 120504 PZFR-000080														○	○			
1112566	XNHW 120508 PZFR-015045														◈	○			
1112551	XNHW 120508 PZTR-015045														◈	○			
1112552	XNHW 120508 PZTR-000080														◈	○			
1112553	XNHW 1205 PZFR-020120														◈	○			
1112567	XNHW 1205 PZFR-030045									○					○	○			
1112568	XNHW 1205 PZTR-030045									○					○	○			

Geometry code	ISO Reference	L	S	l	d1	r	W
1112564	XNHW 120504 PZFR-015045	12,25	5,40	4,50	4,80	0,40	1,50
1112565	XNHW 120504 PZFR-000080	12,25	5,40	8,00	4,80	0,40	-
1112566	XNHW 120508 PZFR-015045	12,25	5,40	4,50	4,80	0,80	1,50
1112551	XNHW 120508 PZTR-015045	12,25	5,40	4,50	4,80	0,80	1,50
1112552	XNHW 120508 PZTR-000080	12,25	5,40	8,00	4,80	0,80	-
1112553	XNHW 1205 PZFR-020120	12,25	5,40	12,00	4,80	-	2,00
1112567	XNHW 1205 PZFR-030045	12,25	5,40	4,50	4,80	-	3,00
1112568	XNHW 1205 PZTR-030045	12,25	5,40	4,50	4,80	-	3,00

◈ First choice | Primeira opção | 1ª opción ◈ Stock item | Produto de stock | Itens de stock ○ Available under request (see page A-7) | Disponível sobre consulta (consulte a página A-7) | Disponible bajo consulta (mire pagina A-7)

Insert order code = (1) Geometry Code + (2) Grade Code

RECOMMENDED CUTTING CONDITIONS | Condições de corte recomendadas | Condiciones de corte recomendables

ISO	Material		HB (Brinell)	Vc (m/min)	Feed fz (mm/t)
	Work piece material	Type of treatment / alloy		PDP403	XNHW 12...
N	Aluminium wrought alloys		80	300 - 4000	0,05 - 0,40
			90	300 - 1500	
	Aluminium cast alloys	< 12% Si	130	300 - 5000	
		< 12% Si	90	300 - 3000	
		> 12% Si	100	300 - 1000	
		brass, red bronze	100	100 - 700	
		bronze	-	100 - 1500	
		lead-free copper and electrolytic copper	-	300 - 3000	
	Non-metallic materials	thermosetting plastics	-	80 - 300	
		fibre-reinforced plastics	200-320	80 - 300	
		hard rubber		80 - 300	

page A-236 page A -244

HARDMILL XDHW - PCD & PCBN | Inserts | Pastilhas | Plaquitas

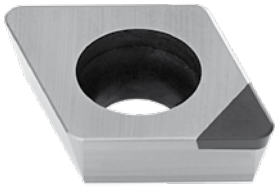

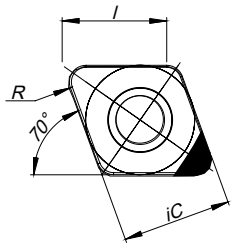

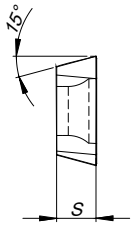

		P							M			K						N		S		H			Dimensions Dimensões Dimensiones (mm)					
		CVD	PVD						PVD			CVD			PVD			UNC	PCD	PVD		PVD	PCBN							
	(2) Grade code	T9	M6	54	68	78	86	I5	68	66	I5	L5	L6	L9	54	68	66	10	D6	66	I5	M6	S6	D4						
(1) Geometry code	ISO Reference	PHS740	PH6103	PH6910	PH6920	PH6125	PH6135	PH6740	PH6920	PH6930	PH6740	PH5705	PH5320	PH5740	PH6910	PH6920	PH6930	PH0910	PDP410	PH6930	PH6740	PH6103	PBL603	PBH910	iC	S	I	F	B	R
1112316	XDHW 040110 FN																		◉						4,00	1,59	4,00	-	-	1,00
1112317	XDHW 040110 TN																							◉	4,00	1,59	4,00	-	-	1,00
1112318	XDHW 060210 FN																		◉						6,50	2,38	6,20	-	-	1,00
1111875	XDHW 060210 TN																							◉	6,50	2,38	6,20	-	-	1,00
1112320	XDHW 10T310 FN																		◉						10,00	3,97	9,90	-	-	1,00
1112321	XDHW 10T310 TN																							◉	10,00	3,97	9,90	-	-	1,00

◉ First choice | Primeira opção | 1ª opción

◉ Stock item | Produto de stock | Itens de stock

○ Available under request (see page A-7) | Disponível sobre consulta (consulte a página A-7) | Disponible bajo consulta (mire pagina A-7)

Insert order code = (1) Geometry Code + (2) Grade Code

To see the full program please check the page A-200.

CENTER & CHAMFER



CENTER & CHAMFER



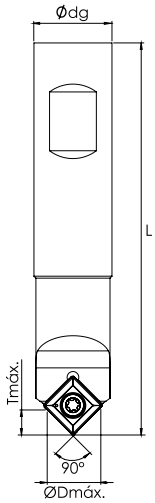

Order code Código	Reference Referência Referencia		Dimensions | Dimensões | Dimensiones (mm)					Kg	Insert Pastilha Inserto	Stock
			ØDmáx.	Tmáx.	Ødg	L	Angle º			
181147400	CHT S16H N11-45	1	13	6,5	16	100	45	0,146	SOMT 11T308	◈
181147500	CHT S16M N11-45	1	13	6,5	16	150	45	0,180	SOMT 11T308	◈

Order code Código	Designation Designação Designación	Nº Toolholder	Holder designation	Nº inserts	Insert Pastilha Inserto	Stock
1410286G4	PK SOMT 11T308 CHTS16H	1	CHT S16H N11-45	10	SOMT 11T308	◈
1410287G4	PK SOMT 11T308 CHTS16M	1	CHT S16M N11-45	10	SOMT 11T308	◈

◈ Stock item | Produto de stock | Itens de stock ◯ Available under request (see page A-6) | Disponível sobre consulta (consulte a página A-6) | Disponible bajo consulta (mire pagina A-6)

SOMT 11T308... ‖ Inserts | Pastilhas | Plaquitas



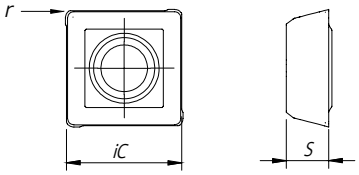

		P						M				K							N		S			H	Dimensions Dimensões Dimensiones (mm)				
		CVD	PVD					CVD	PVD			CVD			PVD				UNC	PCD	CVD	PVD			PVD				
	(2) Grade code	T9	P7	G1	G4	P3	G6	R1	G4	P3	G6	L5	L6	L9	G1	G4	P3	G6	10	D6	R1	P3	G6	P7				
(1) Geometry code	ISO Reference	PHS740	PH7603	PH7910	PH7920	PH7930	PH7740	PHM740	PH7920	PH7930	PH7740	PH5705	PH5320	PH5740	PH7910	PH7920	PH7930	PH7740	PH0910	PDP410	PHM740	PH7930	PH7740	PH7603	iC	S	l	r	F
1112425	SOMT 11T308				◈				◈							◈									10,87	3,97	11,00	0,80	-

◈ First choice | Primeira opção | 1ª opción ◈ Stock item | Produto de stock | Itens de stock ◯ Available under request (see page A-7) | Disponível sobre consulta (consulte a página A-7) | Disponible bajo consulta (mire pagina A-7)

Insert order code = (1) Geometry Code + (2) Grade Code

TOOL SELECTION | Selecção de ferramenta | Selección de herramienta

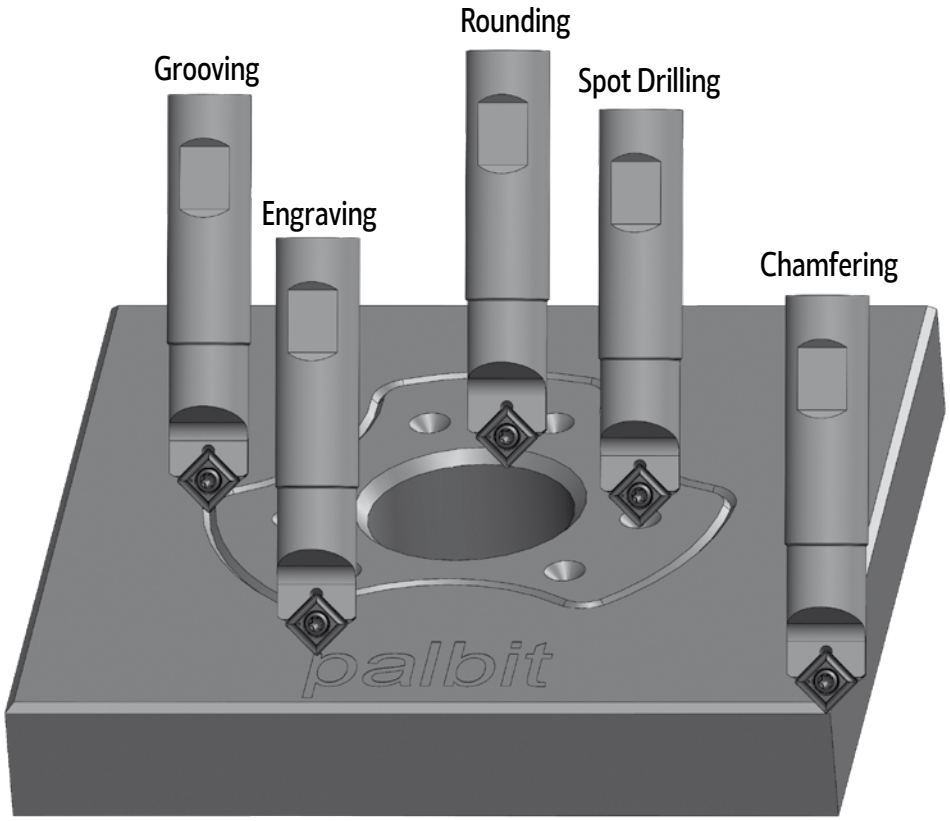

SPARE PARTS | Complementos | Repuestos

Order separately

Cutter ØDc	Insert Screw	Key (Torx)	Key (Torx - Nm)	Torque Value
CHT S16...	P0350800	XT15	DT1530	3,0

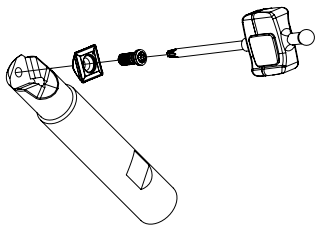

Note: The toolholder is supplied with the XT/PT key. To order the DT key please check the page A-243.
Check the procedures for the clamping screws on the page A-243.

RECOMMENDED CUTTING CONDITIONS | Condições de corte recomendadas | Condiciones de corte recomendables

ISO	PSM	Material	HB (Brinell)	Vc (m/min)	Feed fz (mm/t)
				PH7920	SOMT 11T308
P	1	Unalloyed Steel	125-220	120-150	0,04-0,08
	2	Low-Alloyed Steel	220-280	100-120	0,03-0,07
	3	High-Alloyed Steel	280-380	60-100	0,03-0,06
M	4	SS - Ferritic / Martensitic	200-330	100-150	0,04-0,07
	5	SS - Austenitic	200-330	80-120	0,03-0,06
	6	SS - Austenitic-ferritic (Duplex)	230-260	50-90	0,03-0,06
K	7	Malleable Cast Iron	130-230	90-150	0,05-0,10
	8	Grey Cast Iron	180-245	80-120	0,05-0,08
	9	Nodular Cast iron	160-250	70-110	0,04-0,08

page A-236
page A -244

SPOT FACE

NEW



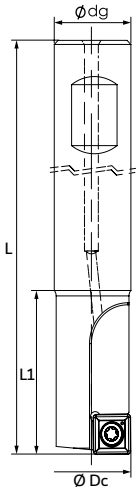

Order code Código	Reference Referência Referencia		Dimensions | Dimensões | Dimensiones (mm)				Kg	Insert Pastilha Inserto	Stock
			ØDc	Ødg	L	L1			
181150100	SP91 D10-W10/100-01-05	1	10	10	100	30	0,048	SPKX 05T104	◈
181150200	SP91 D11-W12/100-01-05	1	11	12	100	30	0,070	SPKX 05T104	◈
181150300	SP91 D13-W16/100-01-06	1	13	16	100	30	0,116	SPKX 060204	◈
181150400	SP91 D14-W16/120-01-06	1	14	16	120	30	0,123	SPKX 060204	◈
181150500	SP91 D17-W20/120-01-07	1	17	20	120	35	0,224	SPKX 070308	◈
181150600	SP91 D18-W20/140-01-07	1	18	20	140	35	0,272	SPKX 070308	◈
181150700	SP91 D20-W20/140-01-09	1	20	20	140	40	0,303	SPKX 090308	◈
181150800	SP91 D21-W25/150-01-09	1	21	25	150	40	0,449	SPKX 090308	◈
181150900	SP91 D25-W25/150-01-11	1	25	25	150	40	0,473	SPKX 110408	◈

◈ Stock item | Produto de stock | Itens de stock

◯ Available under request (see page A-6) | Disponível sobre consulta (consulte a página A-6) | Disponible bajo consulta (mire pagina A-6)

SPKX | Inserts | Pastilhas | Plaquitas

(PHC grade)





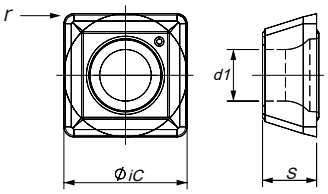

		P							M				K				N		S			H		Dimensions Dimensões Dimensiones (mm)			
		PVD							PVD				PVD				UNC	DP	PVD			PVD					
	(2) Grade code	64	54	68	66	J3	I5	78	68	66	J3	78	54	68	66	J3	10	D6	68	66	J3	64	D4				
(1) Geometry code	ISO Reference	PH6903	PH6910	PH6920	PH6930	PHC930	PH6740	PH6125	PH6920	PH6930	PHC930	PH6125	PH6910	PH6920	PH6930	PHC930	PH0910	PDP410	PH6920	PH6930	PHC930	PH6903	PBH910	IC	S	d1	r
1111635	SPKX 05T104			◈					◈					◈										5,00	1,98	2,20	0,40
1111282	SPKX 060204			◈	◈	◈			◈	◈	◈			◈	◈	◈			◈	◈	◈			6,00	2,38	2,55	0,80
1111636	SPKX 070308			◈					◈					◈										7,94	3,18	2,85	0,80
1111637	SPKX 090308			◈					◈					◈										9,80	3,18	4,10	0,80
1111285	SPKX 110408			◈	◈	◈			◈	◈	◈			◈	◈	◈			◈	◈	◈			11,50	4,80	4,40	0,80

◈ First choice | Primeira opção | 1ª opción

◈ Stock item | Produto de stock | Itens de stock

◯ Available under request (see page A-7) | Disponível sobre consulta (consulte a página A-7) | Disponible bajo consulta (mire pagina A-7)

Insert order code = (1) Geometry Code + (2) Grade Code

NEW

SPARE PARTS | Complementos | Repuestos

Order separately

Cutter ØDc	Insert Screw	Key (Torx)	Key (Torx - Nm)	Torque Value
				
10-11	P0200400	XT06	DT0606	0,6
13-14	P0220500	XT07	DT0709	0,9
17-18	P0250704	XT08	DT0812	1,2
20-21	P0350702	XT15	DT1530	3,0
25	P0400900	XT15	DT1530	3,0

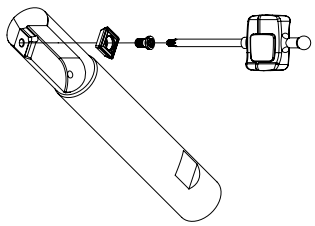

Note: The toolholder is supplied with the XT/PT key. To order the DT key please check the page A-243.
Check the procedures for the clamping screws on the page A-243.

RECOMMENDED CUTTING CONDITIONS | Condições de corte recomendadas | Condiciones de corte recomendables

ISO	PSM	Material	HB (Brinell)	Vc (m/min) ◄— Wear Resistance		Toughness —►
				PH6920	PH6930	PHC930
P	1	Unalloyed Steel	125-220	180-250	160-240	160-240
	2	Low-Alloyed Steel	220-280	160-220	140-200	140-200
	3	High-Alloyed Steel	280-380	130-180	110-160	110-160
M	4	SS - Ferritic / Martensitic	200-330	170-230	140-210	140-210
	5	SS - Austenitic	200-330	160-200	130-200	130-200
	6	SS - Austenitic-ferritic (Duplex)	230-260	140-180	120-190	120-190
K	8	Grey Cast Iron	180-245	180-250	150-220	150-220
	9	Nodular Cast iron	160-250	130-200	110-180	110-180

ISO	PSM	Material	HB (Brinell)	Feed fz (mm/t)				
				SPKX 05...	SPKX 06...	SPKX 07...	SPKX 09...	SPKX 11...
P	1	Unalloyed Steel	125-220	0,05-0,08	0,06-0,10	0,06-0,12	0,07-0,13	0,08-0,15
	2	Low-Alloyed Steel	220-280	0,06-0,12	0,08-0,15	0,10-0,18	0,12-0,22	0,12-0,25
	3	High-Alloyed Steel	280-380	0,06-0,10	0,08-0,15	0,10-0,20	0,12-0,23	0,12-0,26
M	4	SS - Ferritic / Martensitic	200-330	0,05-0,10	0,06-0,12	0,08-0,15	0,09-0,16	0,10-0,20
	5	SS - Austenitic	200-330	0,04-0,08	0,05-0,10	0,06-0,12	0,07-0,13	0,08-0,18
	6	SS - Austenitic-ferritic (Duplex)	230-260	0,04-0,08	0,05-0,11	0,06-0,13	0,07-0,14	0,08-0,19
K	8	Grey Cast Iron	180-245	0,06-0,12	0,08-0,16	0,12-0,20	0,15-0,25	0,15-0,30
	9	Nodular Cast iron	160-250	0,06-0,10	0,08-0,15	0,10-0,18	0,12-0,20	0,15-0,25

GRADES SELECTION GUIDE | Guia para selecção de graus | Tabla para selección de calidades

ISO	PSM	Material	HB (Brinell)	Grades ◄— Wear Resistance		Toughness —►
				PH6920	PH6930	PHC930
P	1	Unalloyed Steel	125-220	✓	✓	✓
	2	Low-Alloyed Steel	220-280	✓	✓	✓
	3	High-Alloyed Steel	280-380	✓	✓	✓
M	4	SS - Ferritic / Martensitic	200-330	✓	✓	✓
	5	SS - Austenitic	200-330	✓	✓	✓
	6	SS - Austenitic-ferritic (Duplex)	230-260	✓	✓	✓
K	8	Grey Cast Iron	180-245	✓	✓	✓
	9	Nodular Cast iron	160-250	✓	✓	✓

Good Conditions
Average Conditions
Difficult Conditions

page A-236
page A -244

CODIFICATION SYSTEM FOR SOLID CARBIDE END MILLS

Sistema de codificação para fresas de metal duro para acabamento | Sistema de codificación para fresas de carburo para acabado

Straight Flute example:	D	S	-	N	S	2	050	080	010	060
Integral Solid Carbide example:	H	F	30	G	S	4	020	06	-	-
	1	2	3	4	5	6	7	8	9	10

1 - Tool type
H - Solid carbide end mill (Hard metal)
D - Diamond (PCD tipped)

2 - Design
F - Square form (Flat top)
R - Square form with corner radius
C - Square form with corner chamfer
B - Ball nose
S - Straight

3 - Helix Angle (Suppressed when it is 90°)
... - Degree of helix rounded to nearest 5 degree

4 - Application
A - Aluminium
G - General application
F - Finishing
M - Semi roughing
C - For copper
R - Rib processing
H - Hard materials
N - Non-ferrous materials

5 - Length of Shank
S - Short length
L - Long length
XL - Extra long length

6 - Flutes number (Z)
Example: Z = 1 ; Z = 2 ; Z = 3

7 - Cutting diameter (ØDc)
Example: 120 = 12,0 mm ; 008 = 0,8 mm

8 - Max cutting depth
(L2 - on straight flute solid carbide | ap - on integral solid carbide)
Example for straight flute solid carbide : 060 = 6 mm ; 080 = 8 mm
Example for integral solid carbide: 04 = 4 mm ; 06 = 6 mm

9 - Corner radius (Suppressed when it doesn't exist)
R... Example: R150 = 1,5 mm ; R015 = 0,15 mm

10 - Shank diameter (only on straight flute solid carbide)
Example: 060 = 6 mm

Straight Flute
technical drawing example

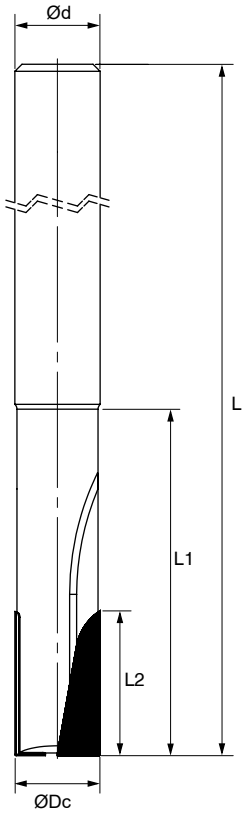

Integral Solid Carbide
technical drawing example

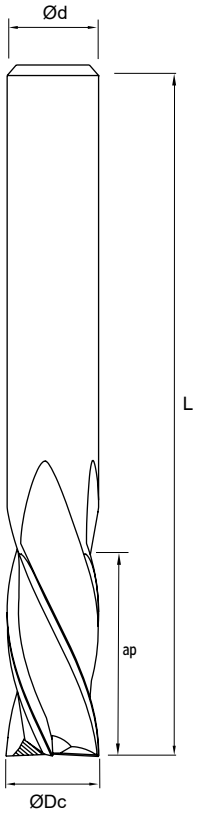

ØDc	Tool diameter
Ød	Shank diameter
ap	Length ot cut
L	Overall length
L2	Tip length
r	Corner form (radius or chamfer)

PCD TIPPED END MILLS

Fresas de metal duro com pontas de PCD | Fresas de carburo con puntas de PCD



HARDMILL BALL NOSE



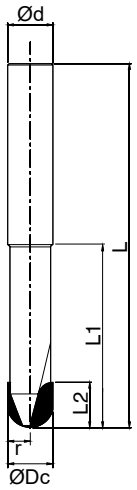

(1) Geometry code	Reference Referência Referencia		N PCD D6 PDP410	Dimensions Dimensions | Dimensões | Dimensiones (mm) | Dimensões | Dimensiones (mm) ØDc	Ød	L	L1	L2	r
	(2) Grade code								
1180079	DBNS 1 030 050 150 060	1	◈	3	3	60	30	5	1,50
1180080	DBNS 1 040 100 200 040	1	◈	4	4	60	30	10	2,00
1180081	DBNS 2 060 100 300 060	2	◈	6	6	80	40	10	3,00
1180082	DBNS 2 080 100 400 080	2	◈	8	8	80	40	10	4,00
1180083	DBNS 2 100 100 500 100	2	◈	10	10	80	40	10	5,00
1180084	DBNS 2 120 100 600 120	2	○	12	12	100	60	10	6,00

◈ Stock item | Produto de stock | Itens de stock ○ Available under request | Disponível sobre consulta | Disponible bajo consulta

Order code = (1) Geometry Code + (2) Grade Code

Material Group	Correction factor	V_c (m/min)
Aluminium cast alloys 5% < Si ≤ 12%	1,6	790-1000
Aluminium cast alloys 12% < Si	1,5	790-1000
Fibre-reinforced synthetics	1,0	400-500
Graphite	1,0	700-850

ØD	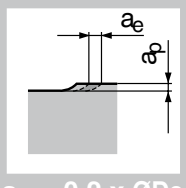 a_e = 0.2 x ØDc a_p = 0.1 x ØDc	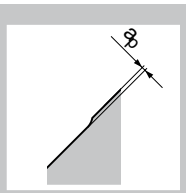 a_p = 0.05 x ØDc
	f_z (mm/t)	f_z (mm/t)
3	0,020	0,022
4	0,025	0,028
6	0,035	0,040
8	0,050	0,055
10	0,060	0,070
12	0,075	0,078

Please note that the value fz from the table above must be multiplied with the corresponding correction factor.

HARDMILL BULL NOSE



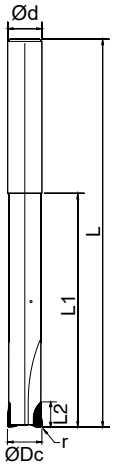

(1) Geometry code	(2) Grade code Reference Referência Referencia		N PCD D6 PDP410	Dimensions Dimensions | Dimensões | Dimensiones (mm) | Dimensões | Dimensiones (mm) ØDc	Ød	L	L1	L2	r
1180073	DSNS 1 030 050 030 040	1	⚙	3	4	60	30	5	0,30
1180075	DSNL 2 040 050 030 040	2	⚙	4	4	75	45	5	0,30
1180076	DSNL 2 060 060 030 060	2	⚙	6	6	100	60	6	0,30
1180077	DSNL 2 080 060 030 080	2	⚙	8	8	125	80	6	0,30
1180074	DSNL 2 100 060 050 100	2	○	10	10	150	100	6	0,30
1180078	DSNL 2 120 070 050 120	2	⚙	12	12	150	100	7	0,30

⚙ Stock item | Produto de stock | Itens de stock ○ Available under request | Disponível sobre consulta | Disponible bajo consulta

Order code = (1) Geometry Code + (2) Grade Code

Material Group	Correction factor	V_c (m/min)
Aluminium cast alloys 5% < Si ≤ 12%	1,6	790-1000
Aluminium cast alloys 12% < Si	1,5	790-1000
Fibre-reinforced synthetics	1,0	400-500
Graphite	1,0	700-850

ØD	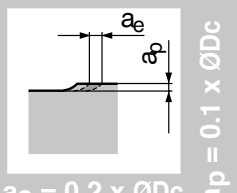 a_e = 0.2 x ØDc a_p = 0.1 x ØDc	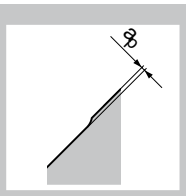 a_p = 0.05 x ØDc
	f_z (mm/t)	f_z (mm/t)
3	0,020	0,022
4	0,025	0,028
6	0,035	0,040
8	0,050	0,055
10	0,060	0,070
12	0,075	0,078

Please note that the value fz from the table above must be multiplied with the corresponding correction factor.

HARDMILL STRAIGHT EDGE

NEW



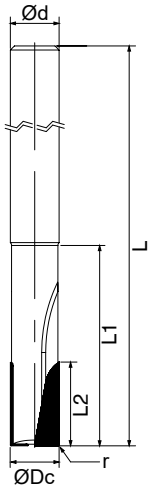

(1) Geometry code	(2) Grade code Reference Referência Referencia		N PCD D6 PDP410	Dimensions Dimensions | Dimensões | Dimensiones (mm) | Dimensões | Dimensiones (mm) ØDc	Ød	L	L1	L2	r
1180011	DSNS 2 040 060 010 060	2	⊛	4	6	51	6,40	6	0,10
1180012	DSNS 2 050 080 010 060	2	⊛	5	6	51	8,40	8	0,10
1180006	DSNS 2 060 080 010 060	2	⊛	6	6	63	21	8	0,10
1180013	DSNS 2 080 080 010 080	2	⊛	8	8	63	27	8	0,10
1180014	DSNS 2 080 120 010 080	2	⊛	8	8	63	27	12	0,10
1180015	DSNS 2 100 080 010 100	2	⊛	10	10	72	32	8	0,10
1180016	DSNS 2 100 160 010 100	2	⊛	10	10	72	32	16	0,10
1180017	DSNS 2 120 080 010 120	2	⊛	12	12	83	38	8	0,10
1180018	DSNS 2 120 160 010 120	2	⊛	12	12	83	38	16	0,10
1180019	DSNS 3 140 080 010 140	3	⊛	14	14	83	38	8	0,10
1180020	DSNS 3 140 160 010 140	3	⊛	14	14	83	38	16	0,10
1180021	DSNS 3 160 120 010 160	3	⊛	16	16	100	52	12	0,10
1180022	DSNS 3 160 200 010 160	3	⊛	16	16	100	52	20	0,10

⊛ Stock item | Produto de stock | Itens de stock ◯ Available under request | Disponível sobre consulta | Disponible bajo consulta

order code = (1) Geometry Code + (2) Grade Code

NON-FERROUS MATERIALS | Materiais não ferrosos | Materiales no ferrosos

ISO	Workpiece Material	Vc (m/min) min	Vc (m/min) max	fz (mm/t) min	fz (mm/t) max	Coolant
N	Aluminium <6%Si	200	6000	0,05	0,30	Emulsion / MQL
	Aluminium <12%Si	200	4000	0,05	0,25	
	Aluminium >12%Si	200	2000	0,05	0,20	
	Cooper/Cooper Alloys	250	3000	0,03	0,30	

SYNTHETICS MATERIALS | Materiais sintéticos | Materiales sintéticos

ISO	Workpiece Material	Vc (m/min) min	Vc (m/min) max	fz (mm/t) min	fz (mm/t) max	Coolant
N	Graphit	150	2500	0,05	0,40	Dry/ Air
	GFRP, CFRP	200	3000	0,05	0,40	Dry/ Air
	Plastics (Termo/Duroplast)	100	2500	0,05	0,30	Emulsion/MQL
	Acrylic (PMMA)	100	1200	0,01	0,25	Emulsion /MQL
	Laminate	100	1200	0,02	0,50	Dry/Air

These recommended parameters are only approximate values. It can be necessary to adjust them regarding to the specific machining operation.

SOLID CARBIDE END MILLS

Fresas de metal duro integral | Fresas de carburo monobloque





SELECTION GUIDE FOR SOLID CARBIDE END MILLS

Line	Reference	Image	Diameter (mm) Ø Minimum	Diameter (mm) Ø Maximum	Flutes number	Helix angle	Square	Corner Chamfer	Ball Nose
UNIVERSAL PLUS	HF30GS HF30GXL		Ø 2,0	Ø 16	4	30°	●		
	HB30GS HB30GL		Ø 2,0	Ø 12	2	30°			●
	HB30GL		Ø 2,0	Ø 12	4	30°			●
UNIVERSAL	HF45GS		Ø 6	Ø 16	4 5	45°		●	
	HC45FL		Ø 6	Ø 12	6	45°		●	

Work Materials						Side milling	Slotting	Copying	Page
P	M	K	S	H	N				
●	●	●	●			●	●		A - 224
●	●	●	●					●	A - 225
●	●	●	●					●	A - 226
●		●		●		●	●		A - 227
●		●		●		●	●		A - 228

● Stock item | Produto de stock | Itens de stock

SELECTION GUIDE FOR SOLID CARBIDE END MILLS

Line	Reference	Image	Diameter (mm) Ø Minimum	Diameter (mm) Ø Maximum	Flutes number	Helix angle	Square	Corner Chamfer	Ball Nose
HARD MATERIALS	HF30HL		Ø 4	Ø 12	4	30°		✓	
	HB30HL		Ø 2	Ø 12	2	30°			✓
STEEL	HC35ML		Ø 4	Ø 20	4	35°		✓	
ALUMINIUM	HC38AS		Ø 3	Ø 12	3	38°		✓	

Work Materials						Side milling	Slotting	Copying	Page
P	M	K	S	H	N				
●				●		●	●		A - 229
●				●				●	A - 230
●		●		●		●	●		A - 231
					●	●	●		A - 232

● Stock item | Produto de stock | Itens de stock

HF30G S/XL Flat Top, 30º Helix, Short | Extra Long Length

HRC ≤ 50

Side milling | Slotting



UNIVERSAL PLUS

P | M | K | S



All order codes are cylindrical shank.
Weldon shank available under request.

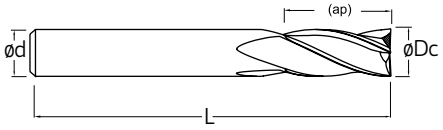

Order code Código	Reference Referência Referencia		Dimensions | Dimensões | Dimensiones (mm)				Stock
			ØDc	Ød	ap	L	
			HF30GS				
211217200	HF30GS 4 020 06	4	2	4	6	38	⛭
211217300	HF30GS 4 030 12	4	3	3	12	38	⛭
1180215G4	HF30GS 4 040 14	4	4	4	14	50	○
211217500	HF30GS 4 050 16	4	5	6	16	50	⛭
211217600	HF30GS 4 060 19	4	6	6	19	50	⛭
1180202G4	HF30GS 4 080 20	4	8	8	20	63	⛭
211217800	HF30GS 4 100 22	4	10	10	22	75	⛭
211217900	HF30GS 4 120 25	4	12	12	25	75	⛭
1180129G4	HF30GS 4 160 32	4	16	16	32	89	⛭
			HF30GXL				
211221200	HF30GXL 4 020 09	4	2	4	9	100	⛭
211221300	HF30GXL 4 030 12	4	3	4	12	100	⛭
211221400	HF30GXL 4 040 16	4	4	4	16	100	⛭
211221500	HF30GXL 4 050 20	4	5	6	20	100	⛭
211221600	HF30GXL 4 060 20	4	6	6	20	100	⛭
211221700	HF30GXL 4 080 20	4	8	8	20	120	⛭
211221800	HF30GXL 4 100 25	4	10	10	25	120	⛭
1180057G4	HF30GXL 4 120 30	4	12	12	30	120	⛭

⛭ Stock item | Produto de stock | Itens de stock

○ Available under request | Disponível sobre consulta | Disponible bajo consulta

Tolerances (Metric)			
Diameter	ØDc	Ød (h6)	L
3-6	+0,000/-0,048	+0,000/-0,008	±0,8
6.1-10	+0,000/-0,058	+0,000/-0,009	±0,8
10.1-18	+0,000/-0,070	+0,000/-0,011	±0,8

HB30G S/L Ball Nose, 30º Helix, Short/Long Length

HRC ≤ 50

Copying



UNIVERSAL PLUS

P M K S

GS - Short
GL - Long

2

30º

Ball nose

All order codes are cylindrical shank.
Weldon shank available under request.

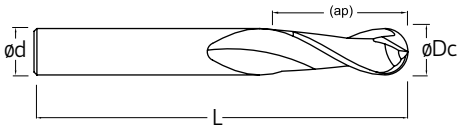

Order code Código	Reference Referência Referencia		Dimensions | Dimensões | Dimensiones (mm)				Stock
			ØDc	Ød	ap	L	
HB30GS							
1180067G4	HB30GS 2 020 02	2	2	3	2	20	
211218800	HB30GS 2 020 06	2	2	3	6	38	◉
211218900	HB30GS 2 030 12	2	3	3	12	38	◉
211219000	HB30GS 2 040 14	2	4	4	14	50	◉
211219100	HB30GS 2 050 16	2	5	6	16	50	◉
211219200	HB30GS 2 060 19	2	6	6	19	50	◉
211219300	HB30GS 2 080 20	2	8	8	20	63	◉
211219400	HB30GS 2 100 22	2	10	10	22	75	◉
211219500	HB30GS 2 120 25	2	12	12	25	75	◉
HB30GL							
211100300	HB30GL 2 040 08	2	4	6	8	70	◉
1180128G4	HB30GL 2 060 12	2	6	6	12	90	◉
1180029G4	HB30GL 2 080 14	2	8	8	14	100	◉
1180030G4	HB30GL 2 100 18	2	10	10	18	100	◉
1180031G4	HB30GL 2 120 22	2	12	12	22	120	◉

◉ Stock item | Produto de stock | Itens de stock

◯ Available under request | Disponível sobre consulta | Disponible bajo consulta

Tolerances (Metric)				
Diameter	ØDc	Ød (h6)	L	r
3-6	+0,000/-0,048	+0,000/-0,008	±0,8	±0,01
6.1-10	+0,000/-0,058	+0,000/-0,009	±0,8	±0,01
10.1-18	+0,000/-0,070	+0,000/-0,011	±0,8	±0,01

HB30G L Ball Nose, 30º Helix, Long Length

HRC ≤ 50

Copying



UNIVERSAL PLUS

P M K S



All order codes are cylindrical shank.
Weldon shank available under request.

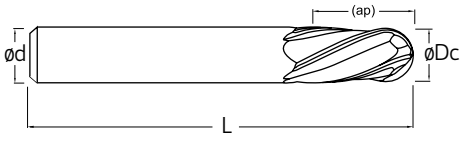

Order code Código	Reference Referência Referencia		Dimensions | Dimensões | Dimensiones (mm)				Stock
			ØDc	Ød	ap	L	
211219600	HB30GL 4 020 04	4	2	4	4	75	◈
211219700	HB30GL 4 030 08	4	3	4	8	75	◈
211219800	HB30GL 4 040 11	4	4	4	11	75	◈
1180150G4	HB30GL 4 050 13	4	5	6	13	75	◈
1180032G4	HB30GL 4 060 13	4	6	6	13	75	◈
1180064G4	HB30GL 4 080 16	4	8	8	16	100	◈
1180065G4	HB30GL 4 100 16	4	10	10	16	100	◈
211220300	HB30GL 4 120 25	4	12	12	25	100	◈

◈ Stock item | Produto de stock | Itens de stock

◯ Available under request | Disponível sobre consulta | Disponible bajo consulta

Tolerances (Metric)				
Diameter	ØDc	Ød (h6)	L	r
3-6	-0,000/-0,03	+0,000/-0,003	±0,8	±0,01
6.1-10	-0,000/-0,04	+0,000/-0,003	±0,8	±0,01
10.1-18	-0,000/-0,05	+0,000/-0,005	±0,8	±0,01

HF45G S Flat Top, 45º Helix, Short Length

HRC ≤ 50

Side milling | Slotting



UNIVERSAL

P | K | H

Short | 4 | 5 | 45º | 45º Corner chamfer

All order codes are cylindrical shank.
Weldon shank available under request.

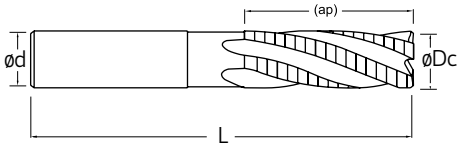

Order code Código	Reference Referência Referencia		Dimensions | Dimensões | Dimensiones (mm)				Stock
			ØDc	Ød	ap	L	
211223400	HF45GS 4 060 13	4	6	6	13	57	◉
211223500	HF45GS 4 080 19	4	8	8	19	63	◉
211223600	HF45GS 4 100 22	4	10	10	22	72	◉
211223700	HF45GS 4 120 26	4	12	12	26	83	◉
211223800	HF45GS 5 160 32	5	16	16	32	92	◉

◉ Stock item | Produto de stock | Itens de stock

◯ Available under request | Disponível sobre consulta | Disponible bajo consulta

Tolerances (Metric)			
Diameter	ØDc	Ød (h6)	L
3-6	-0,020/-0,038	+0,000/-0,008	±0,8
6.1-10	-0,025/-0,047	+0,000/-0,009	±0,8
10.1-18	-0,032/-0,059	+0,000/-0,011	±0,8

HC45FL Corner Chamfer, Variable Helix, Long Length

HRC ≤ 50

Side milling | Slotting



UNIVERSAL

P | K | H

Long | 6 | Variable | 45º Corner chamfer

All order codes are cylindrical shank.
Weldon shank available under request.

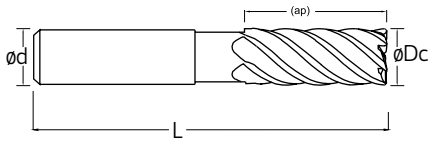

Order code Código	Reference Referência Referencia		Dimensions | Dimensões | Dimensiones (mm)				Stock
			ØDc	Ød	ap	L	
1180054G4	HC45FL 6 060 13	6	6	6	13	57	◎
1180062G4	HC45FL 6 080 19	6	8	8	19	63	◎
1180151G4	HC45FL 6 100 22	6	10	10	22	72	◎
1180056G4	HC45FL 6 120 26	6	12	12	26	83	◎

◎ Stock item | Produto de stock | Itens de stock

○ Available under request | Disponível sobre consulta | Disponible bajo consulta

Tolerances (Metric)			
Diameter	ØDc	Ød (h6)	L
3-6	-0,020/-0,038	+0,000/-0,008	±0,8
6.1-10	-0,025/-0,047	+0,000/-0,009	±0,8
10.1-18	-0,032/-0,059	+0,000/-0,011	±0,8

HF30HL Flat Top, 30º Helix, Long Length

HRC ≤ 70

Side milling | Slotting



HARD MATERIALS

P | H



All order codes are cylindrical shank.
Weldon shank available under request.

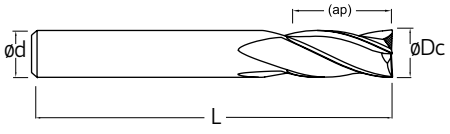

Order code Código	Reference Referência Referencia		Dimensions | Dimensões | Dimensiones (mm)				Stock
			ØDc	Ød	ap	L	
1180112P7	HF30HL 4 040 20	4	4	6	20	75	◉
211222900	HF30HL 4 050 20	4	5	6	20	75	◉
1180196P7	HF30HL 4 060 30	4	6	6	30	75	◉
1180113P7	HF30HL 4 080 35	4	8	8	35	100	◉
211223200	HF30HL 4 100 40	4	10	10	40	100	◉
1180111P7	HF30HL 4 120 50	4	12	12	50	100	◉

◉ Stock item | Produto de stock | Itens de stock

○ Available under request | Disponível sobre consulta | Disponible bajo consulta

Tolerances (Metric)			
Diameter	ØDc	Ød (h6)	L
3-6	-0,020/-0,038	+0,000/-0,008	±0,8
6.1-10	-0,025/-0,047	+0,000/-0,009	±0,8
10.1-18	-0,032/-0,059	+0,000/-0,011	±0,8

HB30HL Ball Nose, 30º Helix, Long Length

HRC ≤ 70

Copying



HARD MATERIALS

P H



All order codes are cylindrical shank.
Weldon shank available under request.

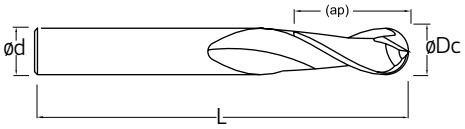

Order code Código	Reference Referência Referencia		Dimensions | Dimensões | Dimensiones (mm)				Stock
			ØDc	Ød	ap	L	
211222000	HB30HL 2 020 04	2	2	6	4	75	●
211222100	HB30HL 2 030 06	2	3	6	6	75	●
1180093P7	HB30HL 2 040 08	2	4	6	8	75	●
1180109P7	HB30HL 2 050 10	2	5	6	10	75	●
1180130P7	HB30HL 2 060 12	2	6	6	12	75	●
1180131P7	HB30HL 2 080 16	2	8	8	16	75	●
1180132P7	HB30HL 2 100 20	2	10	10	20	100	●
1180141P7	HB30HL 2 120 24	2	12	12	24	100	●

● Stock item | Produto de stock | Itens de stock

○ Available under request | Disponível sobre consulta | Disponible bajo consulta

Tolerances (Metric)				
Diameter	ØDc	Ød (h6)	L	r
3-6	-0,000/-0,048	+0,000/-0,008	±0,8	±0,01
6.1-10	-0,000/-0,058	+0,000/-0,009	±0,8	±0,01
10.1-18	-0,000/-0,070	+0,000/-0,011	±0,8	±0,01

HC35ML Corner Chamfer, Variable Helix 35º - 38º, Long Length

HRC ≤ 60

Side milling | Slotting



STEEL MATERIALS

P | K | H



All order codes are cylindrical shank.
Weldon shank available under request.

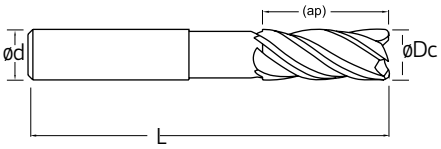

Order code Código	Reference Referência Referencia		Dimensions | Dimensões | Dimensiones (mm)				Stock
			ØDc	Ød	ap	L	
1180137G4	HC35ML 4 040 11	4	4	6	11	57	◉
1180138G4	HC35ML 4 060 13	4	6	6	13	57	◉
1180052G4	HC35ML 4 080 19	4	8	8	19	63	◉
1180053G4	HC35ML 4 100 22	4	10	10	22	72	◉
1180139G4	HC35ML 4 120 26	4	12	12	26	83	◉
211102700	HC35ML 4 160 32	4	16	16	32	92	◉
1180140G4	HC35ML 4 200 38	4	20	20	38	104	◉

◉ Stock item | Produto de stock | Itens de stock

◯ Available under request | Disponível sobre consulta | Disponible bajo consulta

Tolerances (Metric)			
Diameter	ØDc	Ød (h6)	L
3-6	+0,000/-0,020	+0,000/-0,008	±0,8
6.1-10	+0,000/-0,030	+0,000/-0,009	±0,8
10.1-18	+0,000/-0,040	+0,000/-0,011	±0,8
18.1-20	+0,000/-0,050	+0,000/-0,013	±0,8

HC38AS Corner Chamfer ALU, Helix 38º, Short Length

Si ≤ 10

Copying



ALUMINIUM MATERIALS

N



All order codes are cylindrical shank.
Weldon shank available under request.

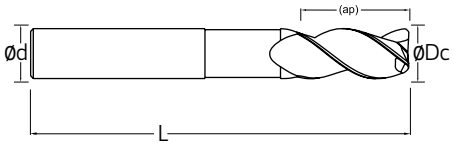

Order code Código	Reference Referência Referencia		Dimensions | Dimensões | Dimensiones (mm)				Stock
			ØDc	Ød	ap	L	
211220400	HC38AS 3 030 07	3	3	6	7	57	◉
211220500	HC38AS 3 040 08	3	4	6	8	57	◉
211220600	HC38AS 3 050 10	3	5	6	10	57	◉
211220700	HC38AS 3 060 10	3	6	6	10	57	◉
211220800	HC38AS 3 080 16	3	8	8	16	63	◉
211220900	HC38AS 3 100 19	3	10	10	19	72	◉
211221000	HC38AS 3 120 22	3	12	12	22	83	◉

◉ Stock item | Produto de stock | Itens de stock

○ Available under request | Disponível sobre consulta | Disponible bajo consulta

Tolerances (Metric)			
Diameter	ØDc	Ød (h6)	L
3-6	-0,000/-0,007	-0,000/-0,007	±0,8
6.1-10	-0,000/-0,007	-0,000/-0,007	±0,8
10.1-18	-0,000/-0,007	-0,000/-0,007	±0,8

SOLID CARBIDE TECHNICAL DATA

Dados técnicos para fresas de metal duro integral | Datos técnicos para fresas en carburo monobloque

Feeds (mm/tooth)

Side Milling

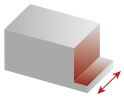

a_e = 0,5 x Dc
a_p = 1,0 x Dc

a_e = 0,25 x Dc
a_p = 1,0 x Dc

a_e = 0,125 x Dc
a_p = 1,0 x Dc

Slotting

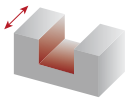

a_e = 1,0 x Dc
a_p = 1,0 x Dc

a_e = 1,0 x Dc
a_p = 1,0 x Dc

Copying

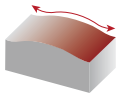

a_e = 0,25 x Dc
a_p = 1,0 x Dc

a_e = 0,125 x Dc
a_p = 1,0 x Dc

ØDc	Roughing		Semi finishing		Finishing		Roughing		Semi finishing		Semi finishing		Finishing	
	fz						fz				fz			
	min	max	min	max	min	max	min	max	min	max	min	max	min	max
1	0,010	0,020	0,020	0,030	0,005	0,020	0,010	0,025	0,008	0,012	0,015	0,025	0,015	0,025
2	0,010	0,020	0,020	0,030	0,005	0,020	0,010	0,035	0,008	0,012	0,025	0,035	0,025	0,035
3	0,020	0,030	0,030	0,040	0,010	0,030	0,020	0,035	0,012	0,020	0,025	0,040	0,025	0,040
4	0,020	0,030	0,030	0,040	0,010	0,030	0,020	0,035	0,012	0,020	0,030	0,045	0,030	0,045
5	0,030	0,050	0,040	0,050	0,010	0,040	0,030	0,055	0,016	0,030	0,035	0,050	0,035	0,050
6	0,030	0,060	0,040	0,070	0,020	0,050	0,030	0,065	0,016	0,030	0,040	0,055	0,040	0,055
8	0,040	0,080	0,050	0,090	0,020	0,060	0,040	0,085	0,024	0,040	0,050	0,065	0,050	0,065
10	0,040	0,080	0,050	0,090	0,020	0,060	0,040	0,085	0,024	0,040	0,055	0,080	0,055	0,080
12	0,050	0,090	0,050	0,100	0,030	0,080	0,050	0,095	0,030	0,050	0,065	0,090	0,065	0,090
16	0,060	0,100	0,060	0,110	0,030	0,100	0,060	0,105	0,032	0,060	0,075	0,120	0,075	0,120
20	0,070	0,120	0,070	0,130	0,040	0,120	0,070	0,125	0,036	0,060	0,090	0,160	0,090	0,160

RECOMMENDED CUTTING SPEEDS (m/min)

Velocidades de corte recomendadas (m/mim) | Velocidades de corte recomendables (m/min)

ISO	Material	Vc (m/min)	
		min	max
P	Non-alloy Steel < 600 N/mm²	250	325
	Non-alloy Steel < 800 N/mm²	210	300
	Alloy Steel 800 N/mm² - 1000 N/mm²	175	250
	Alloy Steel 1000 N/mm² - 1400 N/mm²	125	210
	Alloy Steel 1400 N/mm² - 1600 N/mm²	80	150
M	Ferretic/Martensetic Stainless Steel - Soft	120	175
	Ferretic/Martensetic Stainless Steel - Hard	80	110
K	Cast Iron - Soft	210	250
	Cast Iron - Hard	140	175
N	Aluminium Si < 2% - Soft	400	600
	Aluminium Si 2 - 10% - hard	200	250
	Copper/Copper Alloys - Soft	400	600
	Brass - Soft	200	250
S	Heat resistent super alloys	25	60
H	Hardened materials 46-54 HRc	300	500
	Hardened materials 55-62 HRc	200	400
	Hardened materials 63-70 HRc	180	300

In slotting reduce Vc by 50%.
Slotting is not recommended on hardened material over than 62 HRc.
On hardened materials it is recommended to reduce feed guidelines with 60%.

SOLID CARBIDE TROUBLESHOOTING

Trouble | Problema	Cause | Causa | Fuente	Possible Solution | Solução | Solución
Breaking of tool Quebra da ferramenta Ruptura de la herramienta	• At time of engaging with work material • No ínicio da maquinação • Al principio del mecanizado	• 1. Decrease feed rate. • 2. Decrease projection amount. • 3. Shorten cutting edge length to required minimum limit. • 1. Diminuir a taxa de avanço. • 2. Diminuir quantidade de projeção. • 3. Encurtar comprimento da aresta de corte para limite mínimo exigido. • 1. Diminuir a taxa de avanço. • 2. Disminuir la cantidad de proyección. • 3. Acortar la longitud de la arista de corte para el límite mínimo.
	• When ending cut • No final da maquinação • Al final del mecanizado	
	• During normal cutting • Durante o corte normal • Durante el corte normal	• 1. Decrease feed rate. • 2. Control wear - replace tool early. • 3. Replace chuck or collet. • 4. Decrease projection amount. • 5. Carry out honing. • 6. If 4 flute, reduce to 2 flute (clogging of chipping). • 7. If dry cutting change to wet cutting utilize cutting fluid. In case of wet cutting flow oil supplied from the front, change to from rear angle of side top. Use ample with rate. • 1. Diminuir a taxa de avanço. • 2. Controlar desgaste - substituir ferramenta atempadamente. • 3. Substitua mandril ou porta-pinça. • 4. Diminuir quantidade de projeção • 5. Criar boleamento • 6. Se tiver 4 navalhas, reduzir para 2 (obstrução da apara). • 7. Se utilizou corte seco alterar para corte com utilização de fluído. No caso de utilização de fluído frontal, alterar para utilização do fornecimento do fluído pela parte traseira. • 1. Diminuir a taxa de avanço. • 2. Controlar Desgaste - substituir herramienta atempadamente. • 3. Reemplace plato o el portaherramienta. • 4. Disminuir la cantidad de proyección. • 5. Crear redondeo. • 6. Si 4 hélices, reducir a 2 hélices (obstrucción de viruta). • 7. Si se utiliza corte en seco cambie para corte con uso del fluido. En caso de el uso de frente de fluido cambie para suministro de fluido desde la parte trasera.
	• When changing direction of feed • Ao mudar do direcção do avanço • Al cambiar la dirección de avance	• 1. Utilize circular interpolation (in case of NC machine) or temporarily stop feed (Dowelling). • 2. Reduce feed rate before and after change of directions. • 3. Replace chuck or collect. • 1. Utilização de interpolação helicoidal (no caso de máquina CNC). • 2. Reduzir avanço antes ou depois de mudar de direcção. • 3. Substitua mandril ou porta-pinças. • 1. Utilización de interpolación helicoidal (para máquina CNC). • 2. Reducir avance antes o después de cambiar de dirección. • 3. Reemplace plato o el portaherramienta.
Fracture of cutting edge Fratura da aresta de corte Fractura de la arista de corte	• Fracture of corners • Fratura dos cantos • Fratura dos cantos	• 1. Carry out chamfering or nose with hand lapper. • 2. Down cut - Up cut. • 1. Criar chanfro. • 2. Corte inferior - Corte Superior. • 1. Criar chanfro. • 2. Corte inferior - Corte Superior.
	• Fracture at boundary of depth of cut • Fratura no limite de profundidade de corte • Fractura en el límite de profundidad de corte	• 1. Down cut - Up cut. • 2. Reduce cutting speed. • 1. Corte inferior - Corte Superior. • 2. Reduzir velocidade de corte. • 1. Corte inferior - Corte Superior. • 2. Reducir la velocidad de corte.
	• Chipping at center part or overall • Esmilhar na parte central ou global • Astillado en parte central o general	• 1. Carry out honing or enlarge. • 2. Change number of rotation (in case machine vibrates). • 3. Increase cutting speed. • 4. In ease of squeaking noise during cutting, increase feed. • 5. It dry cutting use cutting fluid or blow air. • 6. Replace chuck or collet. • 7. Reduce cutting speed. • 1. Criar ou aumentar boleamento. • 2. Alterar rotação (no caso da maquina vibrar). • 3. Aumentar velocidade de corte. • 4. No caso de barulho de esmagamento durante o corte, aumentar avanço. • 5. Se estiver a maquinar a seco, utilizar fluído de corte ou ar comprimido. • 6. Substitua mandril ou porta-pinça. • 7. Reduzir velocidade de corte. • 1. Crear o aumentar redondeo. • 2. Cambie la rotación (en el caso de la máquina vibrar). • 3. Aumento de la velocidad de corte. • 4. En el caso de ruido de trituración durante el corte, aumentar avance. • 5. Si mecanizado en seco, utilizar un fluido de corte o aire comprimido. • 6. Reemplace plato o el portaherramienta. • 7. Reducir la velocidad de corte.
	• Large fracturing of cutting edge • Grande fratura da aresta de corte • Gran fractura de la arista de corte	• 1. Decrease feed rate. • 2. If 4 flute reduce to 2 flute. • 3. Carry out honing or enlarge. • 4. Replace chuck or collet. • 5. Reduce cutting speed. • 6. If dry cutting, change to wet cutting. In case oil supply in wet cutting is from the front, change to rear at an angle or from side top. Use ample supply. • 1. Diminuir a taxa de avanço. • 2. Se tiver 4 navalhas, reduzir para 2 (obstrução da apara). • 3. Criar ou aumentar boleamento. • 4. Substitua mandril ou porta-pinça. • 5. Reduzir velocidade de corte. • 6. Se utilizou corte seco alterar para corte com utilização de fluído. No caso de utilização de fluído frontal, alterar para utilização do fornecimento do fluído pela parte traseira. Use amplo fornecimento de fluído de corte. • 1. Disminuir la velocidad de avance. • 2. Si 4 hélices, reducir a 2 hélices (obstrucción de viruta) • 3. Crear o aumentar redondeo. • 4. Reemplace plato o el portaherramienta. • 5. Reducir la velocidad de corte. • 6. Si se utiliza corte en seco cambie para corte con uso del fluido. En caso de el uso de frente de fluido cambie para suministro de fluido desde la parte trasera. Utilice amplio suministro.

Trouble | Problema	Cause | Causa | Fuente	Possible Solution | Solução | Solución
Rapid tool wear Desgaste prematuro da ferramenta Desgaste prematuro de la herramienta		• 1. Reduce cutting speed. • 2. Up cut - Down cut • 3. Increase feed. • 4. Utilize wet cutting or air. • 5. If reground tool, improve surface roughness of flank. • 1. Reducir la velocidad de corte. • 2. Corte Superior - Corte Inferior. • 3. Aumentar avanço. • 4. Utilize fluído de corte ou ar comprimido. • 5. Se utilizar uma ferramenta afiada, melhora a rugosidade da superfície ou flanco. • 1. Reducir la velocidad de corte. • 2. Corte Superior - Corte Inferior. • 3. Aumento del avance. • 4. Utilice corte en mojado o el aire comprimido. • 5. Se utiliza una herramienta afilada, mejora la rugosidad de la superficie o arista.
Inferior finished surface Fraco acabamento da superfície Acabado superficial deficiente	• Surface is good but rough • Superfície boa mas irregular • Buena superficie, pero irregular	• 1. Decrease feed. • 2. In case using 2 flute, increse to 4 flute. • 1. Diminuir avanço. • 2. No caso de usar 2 hélices, aumentar para 4. • 1. Reducir avance. • 2. En caso de utilizar 2 filos de corte, aumentar para 4.
	• Small chip welding • Soldadura de pequenas aparas • Soldadura de pequeñas virutas	• 1. Increase cutting speed. • 2. Utilize wet cutting air blow (ample supply). • 3. Carry out fine honing. • 4. Up cut - Down cut. • 5. Increase feed or enlarge finish allowance. • 1. Aumente velocidade de corte. • 2. Utilize fluído de corte e ar comprimido. • 3. Aumentar boleamento. • 4. Corte Superior - Corte Inferior. • 5. Aumento o avanço ou alargue as tolerâncias no acabamento. • 1. Aumento de la velocidad de corte. • 2. Utilice fluidos de corte y aire comprimido. • 3. Aumentar redondeo. • 4. Corte Superior - Corte Inferior. • 5. Aumente el avance o ampliación de las tolerancias en el acabado.
	• With transverse streaks • Com as raias transversais • Con rayas transversales	• 1. Carry out fine honing. • 2. Use water insoluble cutting fluid. • 3. Down cut - Up cut. • 1. Aumentar boleamento. • 2. Utilize fluídos de corte. • 3. Corte Inferior - Corte Superior. • 1. Aumentar redondeo. • 2. Utilice fluidos de corte. • 3. Corte Inferior - Corte Superior.
	• Signs of excessive cutting • Sinais de corte excessivo • Señales de corte excesivo	• 1. Reduce finishing depth of cut. • 2. Increase cutting speed. • 3. Reduce feed. • 1. Reduzir profundidade de corte no acabamento. • 2. Aumente velocidade de corte. • 3. Diminuir avanço. • 1. Reducir la profundidad de corte en el acabado. • 2. Aumento de la velocidad de corte. • 3. Reducir avance.
Poor machining accuracy Fraca precisão na maquinação Pobre precisión en el mecanizado	• Finish dimensions are on minus side • Dimensões do acabamento estão inferiores ao previsto • Las dimensiones del acabado están terminando abajo de lo esperado	• 1. Up cut - Down cut. • 2. Reduce finishing depth of cut. • 3. Replace chuck or collet. • 4. Reduce projection amount. • 5. Increase cutting speed. • 1. Corte Superior - Corte Inferior. • 2. Reduzir profundidade de corte no acabamento. • 3. Substitua mandril ou porta-pinça. • 4. Diminuir quantidade de projeção. • 5. Aumentar velocidade de corte. • 1. Corte Superior - Corte Inferior. • 2. Reducir la profundidad de corte en el acabado. • 3. Reemplace plato o el portaherramienta. • 4. Disminuir la cantidad de proyección. • 5. Aumento de la velocidad de corte.
	• Poor perpendicularity • Fraca perpendicularidade • Fraca perpendicularidade	• 1. Reduce finishing depth of cut. • 2. Replace chuck or collet. • 3. Reduce projection amont. • 4. Increase cutting speed. • 5. 2 Flute - 4 Flute. • 6. Reduce feed. • 7. Check wear rate - Replace tool. • 1. Reduzir profundidade de corte no acabamento. • 2. Substitua mandril ou porta-pinça. • 3. Diminuir quantidade de projeção. • 4. Aumentar velocidade de corte. • 5. 2 hélices - 4 hélices. • 6. Diminuir avanço. • 7. Verifique o desgaste - Substitua a ferramenta. • 1. Reducir la profundidad de corte en el acabado. • 2. Reemplace plato o el portaherramienta. • 3. Disminuir la cantidad de proyección. • 4. Aumento de la velocidad de corte. • 5. 2 hélices - 4 hélices. • 6. Reducir avance. • 7. Revise el desgaste Reemplace la herramienta.
		• 1. Increase feed rate (in case over 0.05 mm/Zahn, try reducing). • 2. Change cutting speed. • 3. Replace chuck or collet. • 4. Reduce projection amount. • 5. Use 2 flute cutter for rough cutting and 4 flute for finishing. • 6. Down cut - Up cut. • 1. Aumente o avanço (no caso de mais de 0,05 mm / Zahn, tente reduzir). • 2. Alterar velocidade de corte. • 3. Substitua mandril ou porta-pinça. • 4. Diminuir quantidade de projeção. • 5. Usar 2 hélices para desbaste e 4 para acabamento. • 6. Corte Inferior - Corte Superior. • 1. Aumento del avance (en caso de más de 0,05 mm / Zahn, intente reducir). • 2. Cambie de la velocidad de corte. • 3. Reemplace plato o el portaherramienta. • 4. Disminuir la cantidad de proyección • 5. Utilice 2 filos de corte para desbaste y 4 para acabado. • 6. Corte Inferior - Corte Superior.

MULTIFIT DENSIMET ANTI-VIBRATION | Shank | Adaptador | Fijación



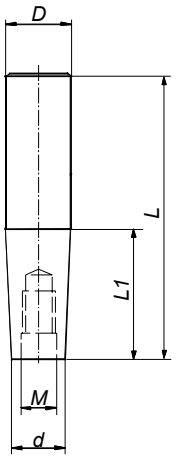

order code	Reference	Dimensions (mm)					Stock
		D	L1	L	d	M	
1191008A0	AC-RI-D12-M06-L040-AV	12	40	90	9,8	M6	◎
1191009A0	AC-RI-D12-M06-L060-AV	12	60	110	9,8	M6	◎
1191021A0	AC-RI-D12-M06-L080-AV	12	80	130	9,8	M6	◎
1191010A0	AC-RI-D16-M08-L040-AV	16	40	95	12,8	M8	◎
1191011A0	AC-RI-D16-M08-L060-AV	16	60	115	12,8	M8	◎
1191012A0	AC-RI-D16-M08-L080-AV	16	80	135	12,8	M8	◎
1191013A0	AC-RI-D16-M08-L100-AV	16	100	155	12,8	M8	◎
1191022A0	AC-RI-D16-M08-L120-AV	16	120	175	12,8	M8	◎
1191014A0	AC-RI-D20-M10-L040-AV	20	40	100	15,8	M10	◎
1191015A0	AC-RI-D20-M10-L060-AV	20	60	120	15,8	M10	◎
1191016A0	AC-RI-D20-M10-L080-AV	20	80	140	15,8	M10	○
1191017A0	AC-RI-D20-M10-L100-AV	20	100	160	15,8	M10	○
1191018A0	AC-RI-D20-M10-L120-AV	20	120	180	15,8	M10	○
1191026A0	AC-RI-D20-M10-L080-D17,8-AV	20	80	140	17,8	M10	◎
1191027A0	AC-RI-D20-M10-L100-D17,8-AV	20	100	160	17,8	M10	◎
1191028A0	AC-RI-D20-M10-L120-D17,8-AV	20	120	180	17,8	M10	◎
1191023A0	AC-RI-D25-M12-L060-AV	25	60	125	20,8	M12	◎
1191024A0	AC-RI-D25-M12-L080-AV	25	80	145	20,8	M12	◎
1191025A0	AC-RI-D25-M12-L100-AV	25	100	165	20,8	M12	◎

◎ Stock item | Produto de stock | Itens de stock

○ Available under request | Disponível sobre consulta | Disponible bajo consulta

MULTIFIT CARBIDE ANTI-VIBRATION | Shank | Adaptador | Fijación



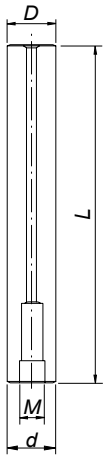

order code	Reference	Dimensions (mm)				Stock
		D	L	d	M	
219102600	AC-RI-D12-M06-L100-HW	12	100	12	M6	⚙
219102700	AC-RI-D12-M06-L150-HW	12	150	12	M6	⚙
219102800	AC-RI-D16-M08-L100-HW	16	100	16	M8	⚙
219102900	AC-RI-D16-M08-L150-HW	16	150	16	M8	⚙
219103000	AC-RI-D20-M10-L150-HW	20	150	20	M10	⚙
219103100	AC-RI-D20-M10-L200-HW	20	200	20	M10	⚙
219103200	AC-RI-D25-M12-L150-HW	25	150	25	M12	⚙
219103300	AC-RI-D25-M12-L200-HW	25	200	25	M12	⚙
219103400	AC-RI-D32-M16-L250-HW	32	250	32	M16	⚙

⚙ Stock item | Produto de stock | Itens de stock

◯ Available under request | Disponível sobre consulta | Disponible bajo consulta

MULTIFIT CYLINDRICAL IN STEEL | Shank | Adaptador | Fijación



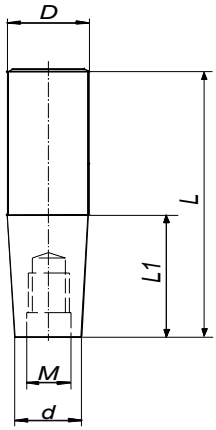

order code	Reference	Dimensions (mm)					Stock
		D	L1	L	d	M	
229000500	AC-RI-D12-M06-L020	12	20	65	9,8	M6	⚙
229000600	AC-RI-D16-M08-L040	16	40	88	12,8	M8	⚙
229000700	AC-RI-D20-M10-L045	20	45	95	17,8	M10	⚙
229000800	AC-RI-D25-M12-L050	25	50	106	20,8	M12	⚙
229000900	AC-RI-D32-M16-L050	32	50	110	28,8	M16	⚙

⚙ Stock item | Produto de stock | Itens de stock ◯ Available under request | Disponível sobre consulta | Disponible bajo consulta

MULTIFIT EXTENSIONS FOR THREADED TYPE CUTTER | Shank | Adaptador | Fijación



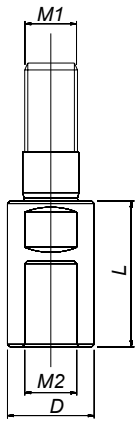

order code	Reference	Dimensions (mm)				Stock
		D	M1	M2	L	
229003200	AL-M08-L040-M08	13,8	M8	M8	40	⚙
229003600	AL-M10-L060-M10	18,0	M10	M10	60	⚙
229003700	AL-M12-L060-M12	21,0	M12	M12	60	⚙
229003100	AL-M16-L060-M16	29,0	M16	M16	60	⚙

⚙ Stock item | Produto de stock | Itens de stock ◯ Available under request | Disponível sobre consulta | Disponible bajo consulta

MULTIFIT REDUCERS FOR THREADED TYPE CUTTER | Shank | Adaptador | Fijación



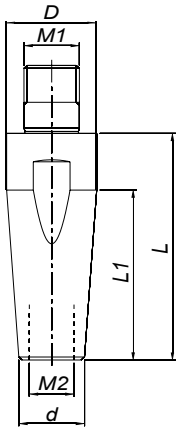

order code	Reference	Dimensions (mm)						Stock
		M1	M2	D	d	L	L1	
229012100	AL-M08-L040-M06	M8	M6	13,8	10,0	40	25	⊛
229012200	AL-M10-L040-M08	M10	M8	18,0	13,8	40	25	⊛
229012300	AL-M12-L040-M10	M12	M10	21,0	18,0	40	15	⊛
229012400	AL-M16-L040-M12	M16	M12	29,0	21,0	40	19	⊛

⊛ Stock item | Produto de stock | Itens de stock

◯ Available under request | Disponível sobre consulta | Disponible bajo consulta

SPARE PARTS

SHIM SCREW



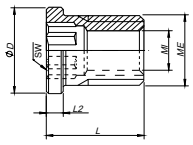

order code	Screw	Dimensions (mm)					
		SW	MI	ME	ØD	L	L2
290030400	T0503509	3,5	M3,5 x 0,6	M5,0 x 0,5	6,3	7	1,2

ADJUSTMENT SCREW



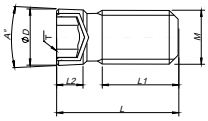

order code	Screw	T (torx)	Dimensions (mm)					
			M	ØD	A°	L	L1	L2
290051500	F0601441	T-20	M6 x 1,0	6,3	5°	13,6	8,5	3,2

DIFFERENCIAL SCREW



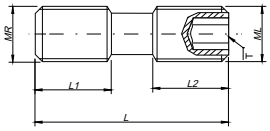

order code	Screw	T (torx)	Dimensions (mm)				
			MR	ML	L	L1	L2
290016300	F0701800	T-20	M7 x 0,75	M7 x 0,75	18	7,5	7,5

INSERT SCREW



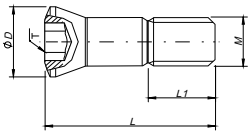

order code	Screw	T (torx)	Dimensions (mm)			
			M	ØD	L	L1
290013900	P0400925	T-15	M4 x 0,5	5,80	8,6	3,5
290010600	P0500925	T-20	M5 x 0,5	6,70	9,5	3,4
290014400	P0501325	T-20	M5 x 0,5	7,50	12,8	4,5
290014000	P0501525	T-20	M5 x 0,5	7,50	15,5	4,5

INSERT SCREW



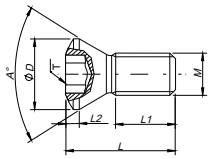

order code	Screw	T (torx)	Dimensions (mm)					
			M	ØD	A°	L	L1	L2
290078800	P0180300	T-GIP	M1,8 x 0,35	2,45	60°	3,4	1,5	0,5
290058400	P0180400	T-GIP	M1,8 x 0,35	2,45	60°	3,7	1,8	0,5
290011300	P0180401	T-6	M1,8 x 0,35	2,75	55°	3,6	1,9	0,4
290031400	P0200500	T-6	M2 x 0,4	2,80	60°	4,7	2,9	0,6
290030600	P0220500	T-7	M2,2 x 0,45	3,20	60°	5,0	3,0	0,6
290033100	P0250503	T-8	M2,5 x 0,45	3,45	60°	5,5	2,8	0,7
290048900	P0250601	T-8	M2,5 x 0,45	3,45	60°	6,0	3,5	0,8
290013400	P0250700	T-8	M2,5 x 0,45	3,3	55	7	4	0,8
290031300	P0250704	T-8	M2,5 x 0,45	3,45	60°	6,5	4,0	0,7
290009100	P0300800	T-9	M3 x 0,5	4,4	60°	7,4	4,2	0,8
290081700	P0350702	T-15	M3,5	5,3	55	7	3,1	2
290019900	P0350800	T-15	M3,5 x 0,6	5,5	60°	7,7	3,7	1
290027100	P0350902	T-10	M3,5 x 0,6	4,7	60°	9	5,5	0,4
290030900	P0350903	T-15	M3,5 x 0,6	5,45	60°	9	6	0,6
290075200	P0350904	T-15	M3,5 x 0,6	4,8	60°	9	5	0,8
290005800	P0351200	T-15	M3,5 x 0,6	530	60°	12	8	1,4
119198800	P0400803	T-15	M4 x 0,7	5,5	60°	8	5,5	1
290048200	P0400900	T-15	M4 x 0,7	5,5	60°	9	5,5	1
290075600	P0401065	T-15	M4 x 0,6	5,7	60	10	6	1
290007000	P0401100	T-15	M4 x 0,7	5,3	55	11	8	2
290047500	P0401200	T-15	M4 x 0,7	5,5	60°	11	6	1,2
290026900	P0451001	T-20	M4,5 x 0,75	6,6	55°	10,5	5,5	1
290006700	P0451400	T-20	M4,5 x 0,75	7,2	60°	14	9	1
290017500	P0501100	T-20	M5 x 0,8	6,4	43°	11	5,9	0,5
290026200	P0501200	T-20	M5 x 0,8	7	55°	12	5,8	1,2
290031700	P0501300	T-20	M5 x 0,8	7	60°	12,8	8	1,3
290078900	P0501302	T-20	M5 x 0,5	7	60°	13	8,2	0,8
290048300	P0601402	T-20	M6 x 1,0	8,4	60°	14	9	0,9

SPARE PARTS

ADJUSTMENT SCREW



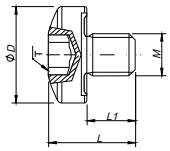

order code	Screw	T (torx)	Dimensions (mm)			
			M	ØD	L	L1
290014200	P0350750	T-15	M3,5 x 0,6	8,00	7,2	4,0

WASHER SCREW



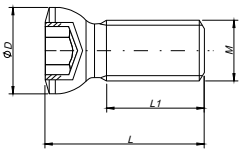

order code	Screw	Dimensions (mm)			
		M	ØD	L	L1
290075600	P0401065	M4 x 0,6	5,7	10,0	6,0
290018500	P0601265	M6 x 1,0	9,00	12,4	6,5
290011000	P0601765	M6 x 1,0	9,00	17,0	11,0
290028400	P0802265	M8 x 1,25	11,0	22,0	15,0

OTHERS

Washer	Order Code	Reference
	119200900	HC01200
	290060200	HC01400
	290002900	HC01800

Cartridge Screw	Order Code	Reference
	119169600	D0602096

Torx Keys	Order Code	Reference
XT 	290058600	XT 06IP
	290011400	XT 06
	290012900	XT07
PT 	290011700	XT 08
	290025700	XT 09
	290013100	XT 10
TT 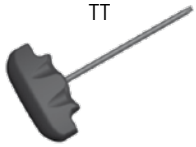	290012400	XT 15
	290013200	XT 20
	290014800	PT 15
LT 	290014900	PT 20
	290056000	TT 20
	290059500	LT 30

Shim	Order Code	Reference
	290081800	CS130300
	290060400	CT160300
	290060300	CT220300

Spring Pin	Order Code	Reference
	290060600	BE02500
	290060500	BE04000

Wedge (Insert)	Order Code	Reference
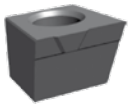	290060900	WA7001
	290061100	WA7003

Wedge (Cartridge)	Order Code	Reference
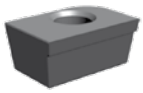	290061000	WA7002
	290061200	WA7004

Cartridge	Order Code	Reference
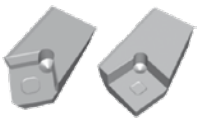	290060700	KR030450
	290060800	KR040750

Hex Key	Order Code	Reference
SS 	290021200	SS40
TS 	290021300	SS50
	290058700	TS40

Tork Keys	Order Code	Reference	Torx	Nm
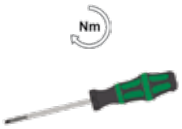	290078300	DT0606IP	6IP	0,6
	290059600	DT0606	6	0,6
	290059700	DT0709	7	0,9
	290059800	DT0812	8	1,2
	290059900	DT0914	9	1,4
	290060000	DT1020	10	2,0
	290047800	DT1530	15	3,0
	290078400	DT2050	20	5,0

Screw for Coolant Supply	Order Code	Reference	M	Ø Ext.
	119163000	J0123510	12	37,9
	119163100	J0164110	16	45,0
	119163200	J0204610	20	54,8

DIN 6368 Wrench	Order Code	Reference
	290058000	SD6368-12
	290058100	SD6368-16
	290058200	SD6368-20

PROCEDURES FOR CLAMPING SCREWS

1. Always use a torque wrench to ensure that screws are correctly tightened (please confirm torques data on catalogue). Torque that is too high will negatively affect the performance of the tool and can cause screw and insert breakage. Torque that is too low will cause insert movement, vibration and degrade the cutting result. Dedicated adjustable torque wrench can be ordered separately (please see above).



2. Clean the insert seat.
Make sure that the insert seat is free from dust or chips from the machining. If necessary, clean the insert seat with compressed air.

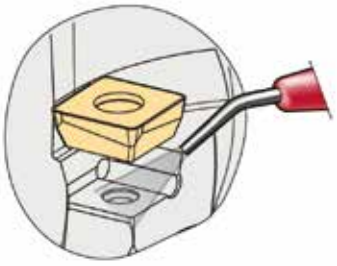

3. Check the insert seat.
Before assembly cutter it is important to ensure that the insert seat has not been damaged during machining or handling.

4. Apply sufficient screw lubrication to prevent seizure. Lubricant should be applied to the screw threads as well as to the screw head face.

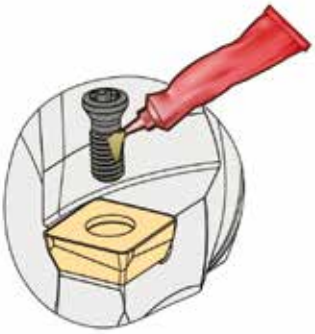

5. Replace worn or damaged screws.

MILLING GRADES

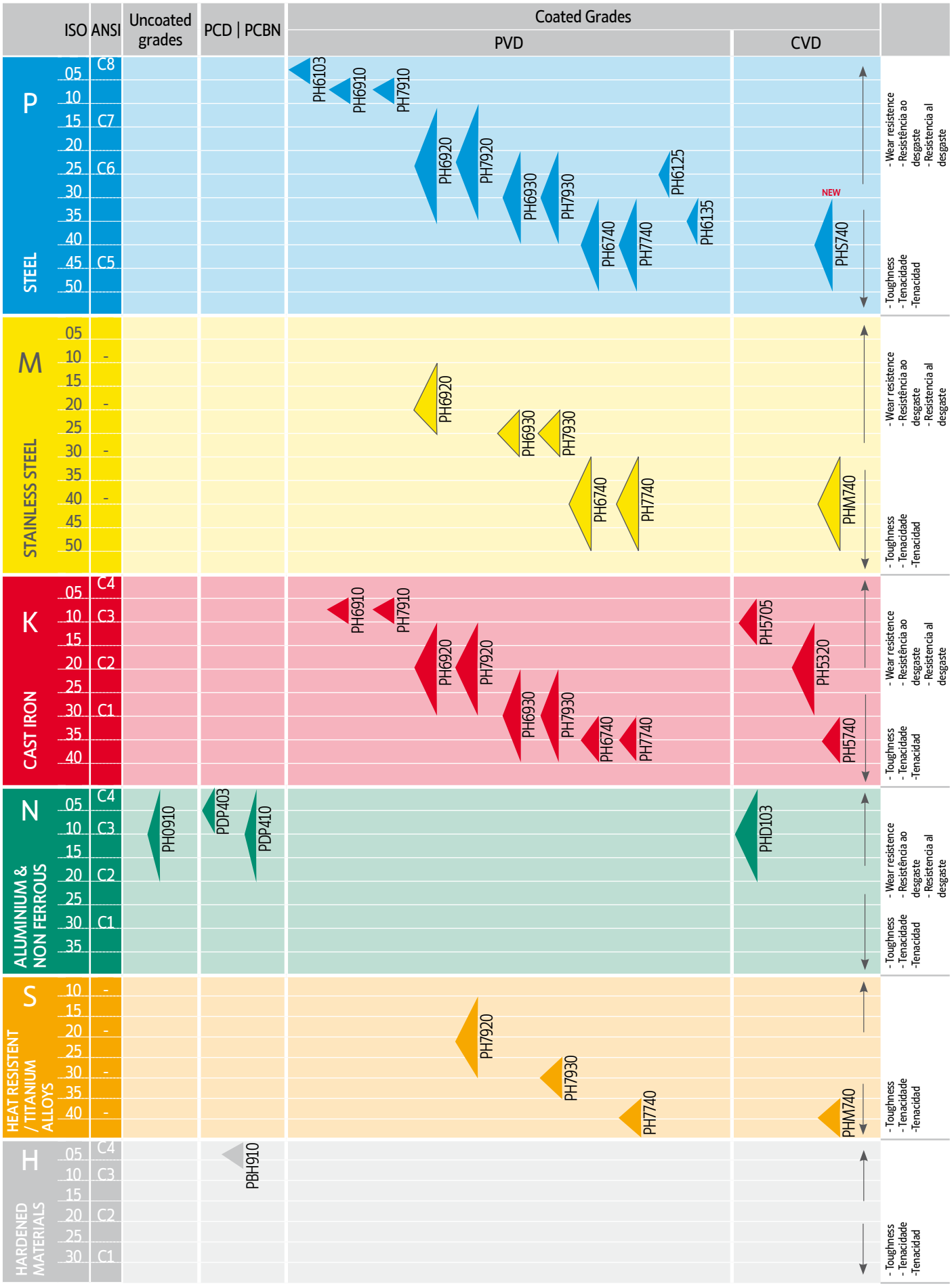

The position and shape of grade symbols indicate the suitable field of application.

Centre of the field of application

Recommended field of application

P STEEL

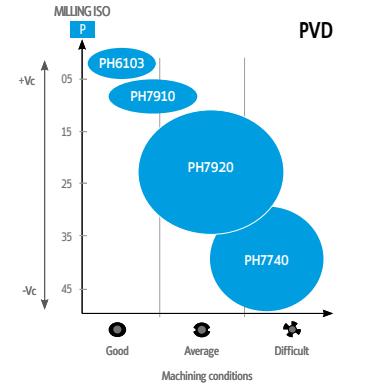

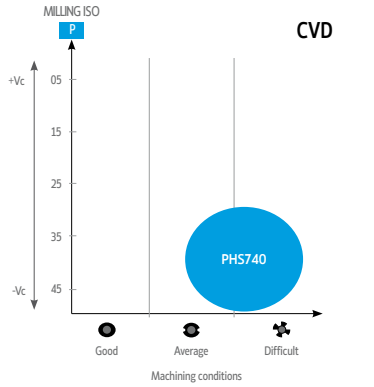

M STAINLESS STEEL

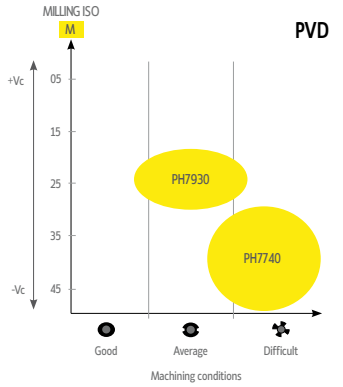

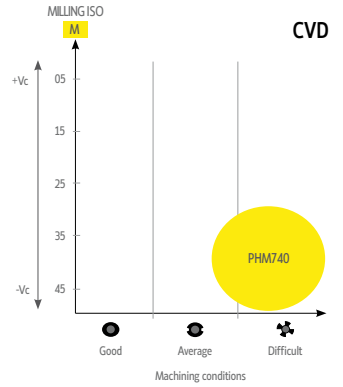

K CAST IRON

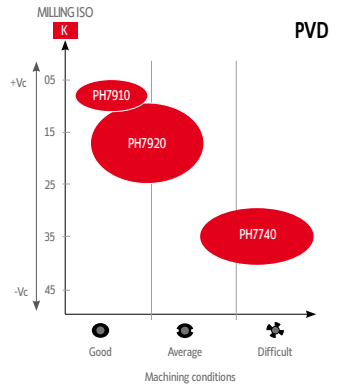

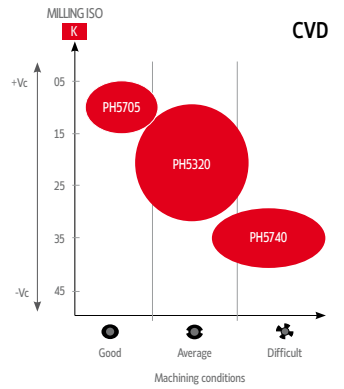

N ALUMINIUM & NON FERROUS

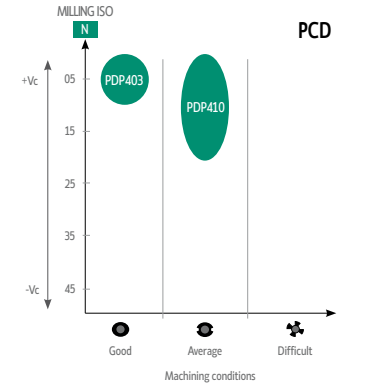

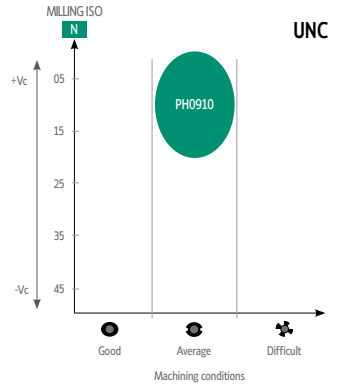

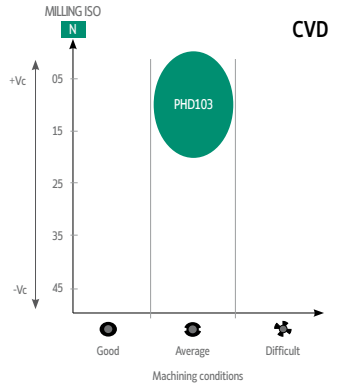

S HEAT RESISTENT / TITANIUM ALLOYS

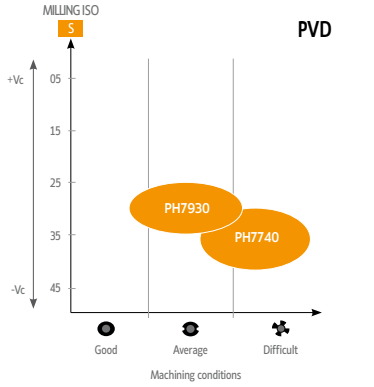

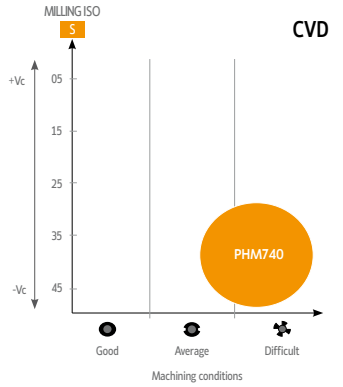

H HARDENED MATERIALS

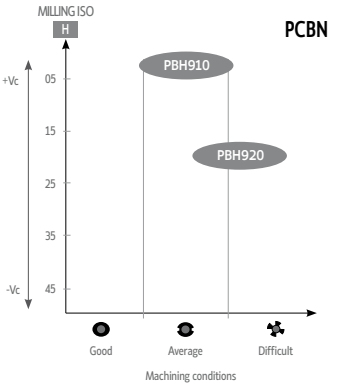

MILLING GRADES

PVD GRADES

PH6103

(P01-P05)
(H10-H20)

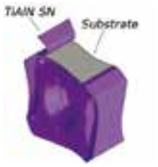

PVD coated sub micro-grain grade suitable for light finishing operations on steels & hardened steels. This is the first choice for finishing on mould steel.

PH6910

(P05-P10)
(K05-K10)

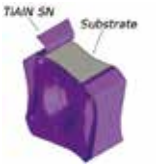

PVD (TiAlN SN) coated carbide grade with a very hard micro grain substrate for light milling of steels, cast irons and some hardened steels.

PH6920

(P10-P35)
(M10-M25)
(K10-K30)
(S10-S30)

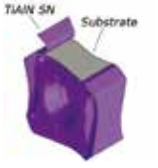

An advanced PVD TiAlN coated grade over a tough wear resistance sub-micro substrate for general purpose machining of stainless steels & titanium alloys.

PH6930

(P20-P40)
(M20-M30)
(K20-K40)

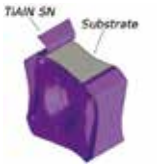

Micro-grain carbide grade suitable for applications with instability conditions. Excellent solution for medium cutting speed applications

PH6740

(P30-P50)
(M30-M50)
(K30-K40)

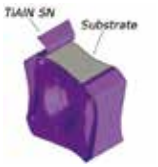

PVD (TiAlN SN) large thickness coated grade for heavy roughing applications. Can work on all type of materials and endures a lot of vibration.

PH6125

(P20-P30)

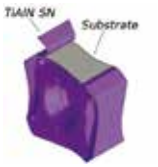

PVD coated carbide grade for light to heavy milling (wet and dry) in steel at elevates temperature (e.g. in hardened steels or prehardened steels). Excellent grade to milling of mould steels at high productivity.

PH6135

(P30-P40)

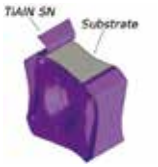

PVD coated carbide four toughness demanding operations in milling of steels. Excellent solutions for instable applications and can be apply in wet or dry.

PH7603

(P01-P05)
(H10-H20)

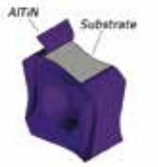

PVD coated sub micro-grain grade suitable for light finishing operations on steels & hardened steels. This is the first choice for finishing on mould steel.

PH7910

(P05-P10)
(K05-K10)

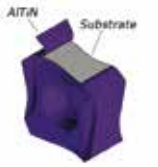

A highly wear-resistant AlTiN-PVD-coated grade primarily for light machining and semi-finishing in steels and hardened steels.

PH7920

(P10-P35)
(M10-M25)
(K10-K30)
(S10-S30)

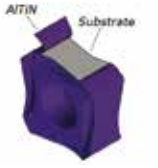

Advanced AlTiN-PVD coated carbide over a tough wear resistance submicro susbtrate for general puporse machining of steels and cast irons at high cutting speeds.

PH7930

(P20-P40)
(M20-M30)
(K20-K40)
(S25-S35)

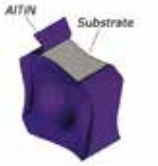

AlTiN-PVD coated carbide developed to provide better performance in general machining of stainless-steels and high-temp alloys. Resistant to breakage and offer improved wear resistance and increased strength.

PH7740

(P30-P50)
(M30-M50)
(K30-K40)
(S30-S40)

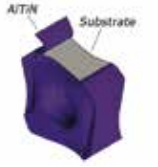

Very tough, general-purpose AlTiN-PVD coated carbide grade for medium to heavy milling applications and on instable conditions.
Recommended for high-temp alloys, all steels and cast irons. Can be used either wet or dry.

CVD GRADES

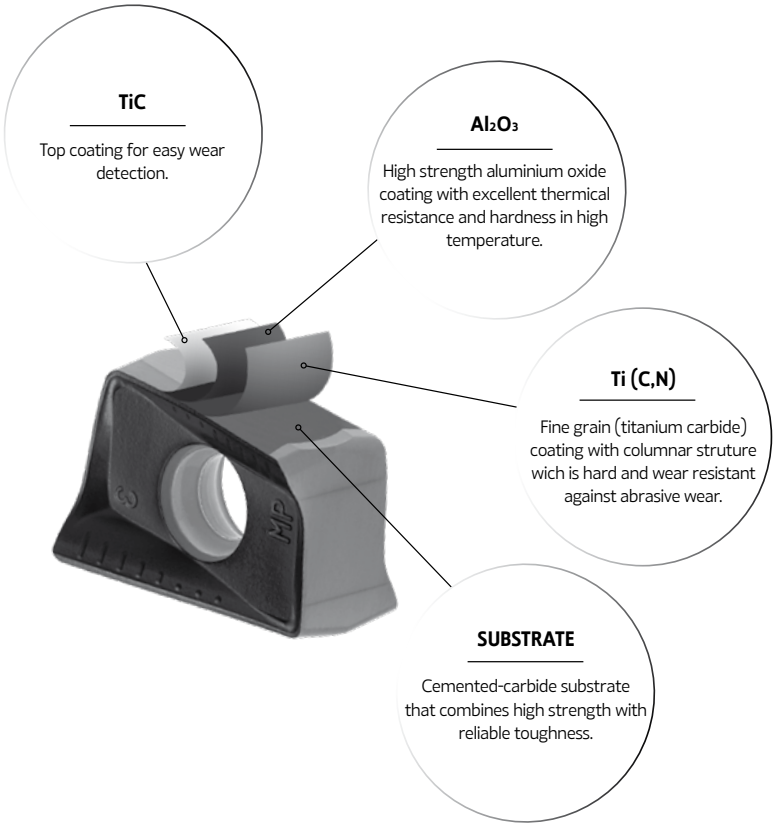

NEW

PHS
NEW
GRADE

PHS740
P30-P50

Ideal for medium to roughing operation in steels at medium cutting speeds.

PH5705
(K05-K15)



MT-CVD coated carbide grade with a hard substrate and very smooth surface. Ideal for high speed cutting of cast irons.

PH5740
(K30-K40)



Substrate grade binary (Wc-Co) with medium grain size combined with the medium temperature coating. Suitable for heavy roughing to roughing operations of cast irons with interruped cut at medium to low cutting speeds.

PH5320
(K10-K30)



MT-CVD coated carbide grade with fine substrate, ideal for medium to high speed cutting of cast irons.
Can be used wet or dry.

PHM740
(M30-M40)
(S30-S40)

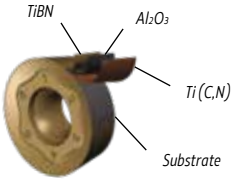

A new MT-CVD coated carbide grade for medium to heavy milling applications on instable conditions. Recommended for high-temp alloys and stainless steel materials. Can be used either wet or dry.

CRYSTALLINE DIAMOND

PHD103
(N05-15)



Carbide with highly abrasion-resistant diamond coating for graphite machining

UNCOATED CARBIDE GRADE

PH0910
(K01-K10)
(N01-N20)



Uncoated carbide micro-grain grade combining a good abrasive wear resistance and toughness. Suitable for rough to finish operations of HRSA, Titanium alloys, Cast irons and Aluminium alloys.

CUBIC BORON NITRITE

PBH910
(H01-H05)



Cubic Boron Nitride grade for finishing of hardened steel and cast iron.

POLYCRYSTALLINE DIAMOND

PDP403
(N01-N10)



Polycrystalline diamond grade for finishing and semi finishing of non-ferrous metallic materials. It is a excellent solution for aluminium alloys with high content of Si.

PDP410
(N01-N20)



Polycrystalline diamond grade for finishing and semi finishing of non-ferrous metallic materials. It is a excellent solution for aluminium alloys with low content of Si.

COMPARATIVE GRADES CHART

PVD COATED GRADES | GRAUS REVESTIDOS A PVD | GRADOS CON RECUBRIMIENTO PVD

ISO	Material	Palbit	Sandvik	Kennametal	Iscar	Seco	Mitsubishi	Sumitomo	Hitachi	Walter	Kyocera	Taegutec	Dijet	Ceratizit
P	P01	**PH7603 PH6103**	GC1010	KC505M KC510M KC515M	IC903				ATH80D JP4105			TT2510 TT5505	JC8003	
P	P10	**PH7910 PH6910**	GC1010 GC1025	KC505M KC510M KC515M KC610M KC715M	IC903 IC907 IC950 IC908 IC910 IC380 IC900	CP200 TS2001	MP6120 VP15TF	ACP200	ATH80D PN08M ATH10E PN15M JP4105 JP4115 JP4120	WHH15 WXM15	PR830 PR1225 PR1230 PR1525	TT2510 TT5505 TT5515 TT7080	JC8003 JC8015 JC5015 JC5118	
P	P20	**PH7920 PH6920 PH6125**	GC1025 GC1030 GC2030	KC522M KC525M KC527M KC530M KC610M KC620M KC635M KC715M KC720M KC730M	IC907 IC950 IC908 IC910 IC380 IC900 IC830 IC928 IC1008	CP250 TS2500	MP6120 VP15TF MP6130 UP20M VP20RT	ACP200 ACP300	JP4120 JS4045 CY250	WHH15 WXM15	PR830 PR1225 PR1230 PR1525	TT2510 TT5505 TT5525 TT7080 TT9030 TT9080	JC8015 JC5015 JC5118 JC5040	CTP1235 CTP1625
P	P30	**PH7930 PH6930 PH6135**	GC1025 GC1125	KC525M KC527M KC530M KC537M KC610M KC620M KC720M KC725M KC730M KC735M	IC907 IC950 IC908 IC910 IC380 IC900 IC830 IC928 IC1008	MP3000 F25M F30M F40M	MP6120 VP15TF MP6130 UP20M VP20RT VP30RT	ACP200 ACP300	JS4045 CY250 JM4160	WSP45 WSP46	PR830 PR1225 PR1230 PR1525	TT5525 TT7080 TT8020 TT8080 TT9030 TT9080	JC5118 JC5040 JC8050 JC7560	CTP1235 CTP1625 CTP2235
P	P40	**PH7740 PH6740**		KC537M KC720M KC725M KC735M	IC830 IC928 IC1008	MP3000 F40M T60M	VP30RT	ACP300	JM4160	WSP45 WSP46		TT8020	JC5118 JC5040 JC8050 JC7560	CTP1235 CTP2235
M	M01		GC1010		IC907 IC903			ACM100 ACK300	PCS08M					
M	M10	**PH7910 PH6910**	GC1010 GC1025 GC1030 GC2030	KC515M KC610M KC635M KC720M	IC907 IC903		VP15TF	ACM100 ACK300 ACP300	PCS08M CY150	WXM15	PR830 PR1225 PR1525 PR1535			
M	M20	**PH7920 PH6920**	GC1025 GC1030 GC1040 GC2030	KC522M KC525M KC530M KC610M KC635M KC720M KC730M	IC380 IC900 IC908 IC928 IC1008	MP3000 MS2050 F25M F30M	VP15TF MP7130 MP7030 UP20M VP20RT	ACM300 ACP300	CY150 CY250	WXM15 WSM35 WSM36	PR830 PR1225 PR1525 PR1535	TT8020 TT8080	JC8015 JC5015 JC5118	CTP1235 CTP1625
STAINESS STEEL	M30	**PH7930 PH6930 PH6135**	GC1040 GC2030	KC522M KC525M KC530M KC537M KC725M KC730M KC735M	IC380 IC900 IC908 IC928 IC1008 IC328 IC330	MP3000 MS2050 F30M F40M	VP15TF MP7130 MP7030 UP20M VP20RT MP7140 VP30RT	ACM300	CY250 JM4160	WSM35 WSM36 WSP45 WSP46	PR830 PR1225 PR1525 PR1535	TT8020 TT8080	JC8015 JC5015 JC5118 JC8050 JC7560	CTP1235 CTP2235
STAINESS STEEL	M40	**PH7740 PH6740**	GC1040	KC725M	IC1008 IC328 IC330	MS2050 F40M	MP7140 VP30RT	ACM300	JM4160	WSM35 WSM36 WSP45 WSP46	PR1225 PR1525 PR1535	TT8020	JC5015 JC5118 JC8050 JC7560	CTP2235
K	K01		GC1010		IC380 IC900		MP8010		ATH80D JP4105		PR1510	TT6080	JC8003	AMZ
CAST IRON	K10	**PH7910 PH6910**	GC1010 GC1020	KC514M KC515M KC520M KC620M	IC380 IC900 IC810 IC910	MK2050	MP8010 VP15TF		ATH80D JP4105 JP4120 CY150	WHH15 WXM15 WKK25	PR1210 PR1510	TT6080	JC8015	AMZ CTP3220 CTP6215
CAST IRON	K20	**PH7920 PH6920**	GC1020	KC514M KC520M KC522M KC524M KC527M KC610M KC620M KC635M	IC810 IC910 IC950 IC350 IC830 IC928	MK2050	MP8010 VP15TF VP20RT	ACK300	JP4120 CY150 CY250	WHH15 WXM15 WKK25	PR1210 PR1510		JC8015 JC5015	CTP3220 CTP1625
CAST IRON	K30	**PH7740 PH6740**		KC522M KC524M KC527M KC537M KC610M KC620M KC635M	IC830 IC928 IC1008 IC808 IC908	MK2050	VP15TF VP20RT	ACK300	CY250	WKK25	PR1510		JC8015 JC5015	

PVD COATED GRADES | GRAUS REVESTIDOS A PVD | GRADOS CON RECUBRIMIENTO PVD

ISO Material		Palbit	Sandvik	Kennametal	Iscar	Seco	Mitsubishi	Sumitomo	Hitachi	Walter	Kyocera	Taegutec	Dijet	Ceratizit
N ALUMINIUM	N01			KC410M KC510M KC5410								TT6080		AMZ
	N10		GC1025 GC1030	KC410M KC510M KC5410 KC620M				DL1000	SD5010 HD7010	WXN15		TT6080 TT8020		AMZ
	N20		GC1025 GC1030	KC422M KC620M		F15M	LC15TF	DL1000	SD5010 HD7010	WXN15		TT8020		
S HEAT RESISTENT / TITANIUM ALLOYS	S01		GC1010	KC510M	IC808 IC907 IC908			ACM100 ACK300			PR905 PR1210 PR1535		JC8003 JC8015	AMZ
	S10	**PH7910 PH6910**	GC1010 GC1030 GC2030	KC510M KC610M	IC808 IC907 IC908 IC903	MS2050	MP9120 VP15TF MP9130 MP9030	ACM100 ACK300	PTH13S JS1025		PR905 PR1210 PR1535	TT9030 TT9080 TT8080	JC8003 JC8015 JC5015 JC5118	AMZ CTP1625
	S20	**PH7920 PH6920**	GC1030 GC1040 GC2030 GC2040	KC522M KC525M KC610M	IC300 IC900 IC830 IC928	MS2050 F40M	MP9120 VP15TF MP9130 MP9030	ACM300	PTH13S JS1025	WSM35 WSM36	PR905 PR1210 PR1535	TT8080 TT8020	JC8015 JC5015 JC5118 JC8050 JC7560	CTP1235 CTP1625
	S30	**PH7930 PH6930**	S30T GC1040 GC2040	KC522M KC525M KC725M	IC830 IC928	MS2050 F40M	MP9130 MP9030	ACM300		WSM35 WSM36 WSP45 WSP46	PR1535	TT8020	JC5118 JC8050 JC7560	CTP1235 CTP2235
	S40	**PH7740 PH6740**	GC2040 GC1040	KC725M	IC830 IC928	MS2050 F40M				WSP45 WSP46			JC5118 JC8050 JC7560	
H HARDENED MATERIAL	H01	**PH7603 PH6103**	GC1010	KC510M	IC903		MP8010					TT2510 TT5505	DH102 JC6102 JC8003 JC8008	
	H10	**PH7603 PH6103 PH7910**	GC1010 GC1025 GC1030	KC505M KC510M KC635M	IC903 IC808 IC907 IC908	MH1000 F15M	MP8010 VP15TF		PTH08M JP4105	WHH15		TT5515 TT6080	JC6102 JC8003 JC8008 JC8015 JC5118	CTP6215
	H20		GC1025 GC1030	KC635M	IC808 IC907 IC908 IC380 IC900	F15M	VP15TF		JP4105	WHH15		TT5515 TT6080	JC8015 JC5118	CTP6215
	K10				IC380 IC900 IC1008	MP3000 F30M								

COMPARATIVE GRADES CHART

CVD COATED GRADES | GRAUS REVESTIDOS A CVD | GRADOS CON RECUBRIMIENTO CVD

ISO Material		Palbit	Sandvik	Kennametal	Iscar	Seco	Mitsubishi	Sumitomo	Hitachi	Walter	Kyocera	Taegutec	Dijet	Ceratizit
P STEEL	P40	**PHS740**				MP2500				WKP35S				
M STAINESS STEEL	M10		GC2015	KCPM20	IC9250 IC520M IC9350			ACM200					JC730U	
	M20		GC4230	KCPM20 KCPM30 KC927M	IC9250 IC520M IC9350 IC4050 IC635	MP2500 T350M T25M	F7030	ACM200			CA6535	TT7800	JC730U	CTC5235 GM226+
	M30	**PHM740**	GC2040 GC4230 GC4240 S40T	KCPM30 KC927M	IC9350 IC4050 IC635	MP2500 T350M T25M	F7030	ACM200	GX2160		CA6535	TT7800	JC730U	CTC5235 CTC5240 GM226+ GM246 GM43+
	M40	**PHM740**	GC2040 GC4240 S40T		IC635	In4500 T350M			GX2160		CA6535			CTC5235 CTC5240 GM246 GM43+
K CAST IRON	K01	**PH5705**		KC907M	IC8080 IC4100 IC5100 IC9150		MC5020	ACK200		WKP15	CA420M		JC605W	CTC3215
	K10	**PH5705**	GC3220	KC907M KC914M KC917M KC924M KCK15	IC8080 IC4100 IC5100 IC9150 IC9080 IC520M	MK1500	MC5020	ACK200	GX2120	WKP15 WKP25	CA420M	TT6800	JC605W JC608X JC610	CTC3215 SR216 SR226+
	K20	**PH5320**	GC3220 GC3330 GC3040 GC4220 GC4230	KC917M KC924M KCK15 KCPM20 KCPK30 KC927M	IC5100 IC9150 IC9080 IC520M IC4050	MK1500 MP1500	MC5020	ACK200	GX2120 GX2140	WKP15 WKP25 WKP35 WKP35S	CA420M	TT6800	JC605W JC608X JC610	SR216 SR226+
	K30	**PH5740**	GC3330 GC3040 GC4220 GC4230 GC4240	KCPM20 KCPK30 KC927M	IC520M IC4050	MK1500 MP1500	MC5020		GX2140	WKP25 WKP35 WKP35S			JC610	

UNCOATED GRADES | GRAUS NÃO REVESTIDOS | GRADOS SÍN RECUBRIMIENTO

ISO / Material		Palbit	Sandvik	Kennametal	Iscar	Seco	Mitsubishi	Sumitomo	Hitachi	Walter	Kyocera	Taegutec	Dijet	Ceratizit
N	N01	**PH0910**	H10	K115M KC313	IC20		HTi 10	H1 G10E	PCS08M CY100H		PCS08M CY100H			H210T
ALUMINIUM	N10	**PH0910**	H13A H10F	K115M KC313	IC08	H15	HTi 10	H1 G10E	PCS08M CY100H CY10H	WK10	PCS08M CY100H CY10H	K10 UF10		H210T
	N20	**PH0910**	H13A H10F	K125M	IC08 IC28	HX H15 H25	HTi 10					K10		H216T

Formulas

Spindle Speed (rev/min)

$$n = \frac{v_c \cdot 1000}{\pi \cdot D_c}$$

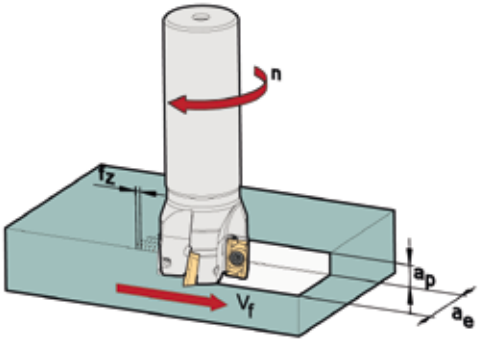

Cutting Speed (m/min)

$$v_c = \frac{n \cdot \pi \cdot D_c}{1000}$$

Feed Speed (mm/min)

$$v_f = n \cdot Z_n \cdot f_z$$

Feed per Revolution (mm/rev)

$$f = Z_n \cdot f_z$$

Feed per Tooth (mm/tooth)

$$f_z = \frac{v_f}{n \cdot Z_n}$$

Metal removal Rate (cm³/min)

$$Q = \frac{a_e \cdot a_p \cdot v_f}{1000}$$

Cutting Speed and Spindle Speed for Copying

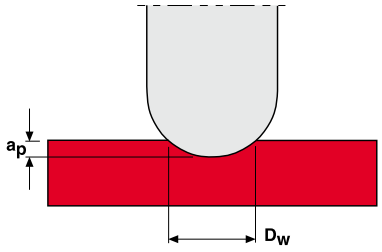

$$v_c = \frac{n \cdot \pi \cdot D_w}{1000} \quad \text{(m/min)}$$

$$n = \frac{v_c \cdot 1000}{\pi \cdot D_w} \quad \text{(RPM)}$$

$$D_w = 2 \cdot \sqrt{a_p (D_c - a_p)} \quad \text{(mm)}$$

Nomenclature

a_e	- Width of cut mm/radial depth of cut	(mm)
a_p	- Depth of cut mm/radial depth of cut	(mm)
D_c	- Cutter diameter	(mm)
f	- Feed per Revolution	(mm/rev)
f_z	- Feed per Tooth	(mm/tooth)
n	- Spindle Speed	(rev/min)
Q	- Material removal Rate	(cm³/min)
V_c	- Cutting Speed	(m/min)
V_f	- Feed Speed	(mm/min)
Z_n	- Nº of theeth	

POWER REQUIREMENT CALCULATION

Cálculo de potência requerida | Cálculo del requerimiento de potencia

Calculating the power demand

$$P_c = \frac{a_p \times a_e \times v_f}{60\,000\,000 \times \eta} \times k_c$$

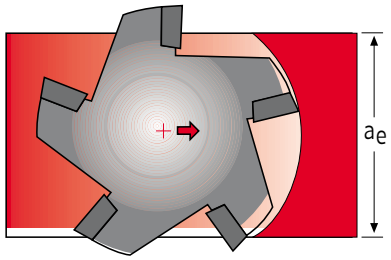

P_c - Power (kW)
a_p - Depth of cut (mm)
a_e - Width of cut (mm)
v_f - Feed speed (mm/min)
η - Efficiency
k_c - Cutting force per mm²

Calculating average chip thickness (h_m) and cutting force per mm² (k_c)

$$h_m = \frac{360 \times f_z \times a_e}{\pi \times Dc \times \omega_e} \times \sin k_r$$

h_m - Average chip thickness (mm)
f_z - Feed per tooth (mm/tooth)
D_c - Cutter diameter (mm)
ω_e - Engagement angle
k_r - Lead angle

$$k_c = \frac{1}{h_m^{m_c}} \times k_c x$$

m_c* - Exponent
$k_c x$* - Cutting force for 1 mm chip thickness (N/mm²)

* Please see these values on page 797.

Engagement angle

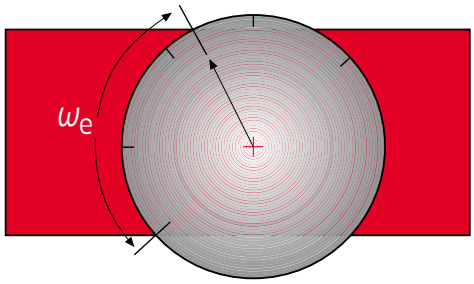

Engagement a_e / D_c	Engagement angle ω_e
70%	89°
100%	180°

Engagement a_e / D_c	Engagement angle ω_e
5%	26°
10%	37°
75%	60°

Coarse Pitch Type	Normal Pitch Type	Fine Pitch Type
First choice for cutting aluminium (long-chipping material - ISO N). First choice for unstable operations due to lowest cutting forces. Smoth cutting allows longer overhang applications. First choice for deep cutting and high feed rates.	First choice for roughing in stable conditions. Good productivity. Good chip space for roughing in steels, stainless steel and super alloys. First choice for shallow cutting with low feed rates.	First choice for cast iron. First choice for high productivity with low width of cut (Ae). Roughing in super alloys materials in combination with round inserts. For cutting operations where chip dischange volume is small and high table feed is desired.
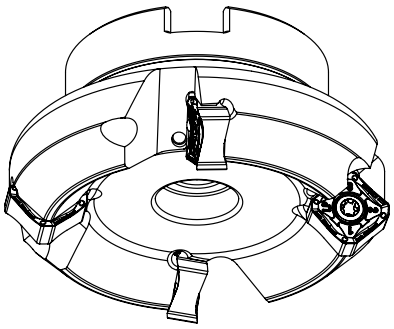	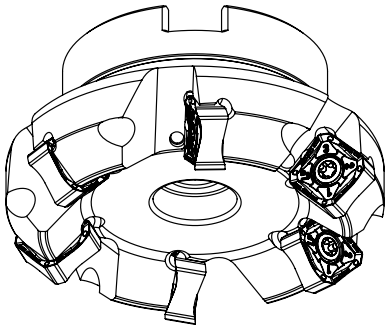	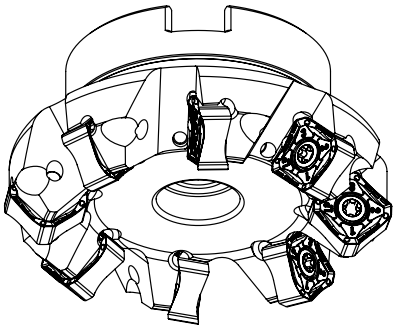

Standard inserts

Positive and Negative Rake Angle

- Insert shape whose cutting edge precedes is a positive rake angle.
- Insert shape whose cutting edge follows is a negative rake angle.

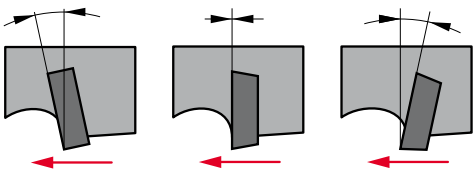

Negative (-) Rake Angle | Neutral Rake Angle | Positive Rake Angle

Standard Cutting Edge Shape

Standard Cutting Edge Combinations	(+) Axial Rake Angle Radial Rake Angle (+)	(-) Axial Rake Angle Radial Rake Angle (-)	(+) Axial Rake Angle Radial Rake Angle (-)
	Double Positive (DP Edge Type)	Double Negative (DN Edge Type)	Negative / Positive (NP Edge Type)
Axial Rake Angle γ_p	Positive (+)	Negative (-)	Positive (+)
Radial Rake Angle γ_f	Positive (+)	Negative (-)	Negative (-)
Insert Used	Positive Insert (One Sided Use)	Negative Insert (Double Sided Use)	Positive Insert (One Sided Use)
Work Material: Steel	✓	–	✓
Work Material: Cast Iron	–	✓	✓
Work Material: Aluminium Alloy	✓	–	–
Work Material: Hardened Materials	✓	–	✓

Choosing Cutter Diameter

The Best Cutter Diameter (ØDc) should be selected upon the workpiece dimensions

$D_C = 1{,}3 - 1{,}5\ a_e$

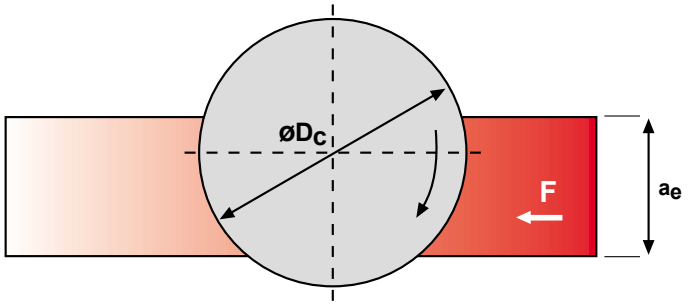

If the machine power is limited or the workpiece is too wide, select a cutter diameter that takes more than two passes or that matches the power of machine. When the appropriate cutter diameter is not available, proper cutter position will give good results.

$a_e = 3/4\ D_C$

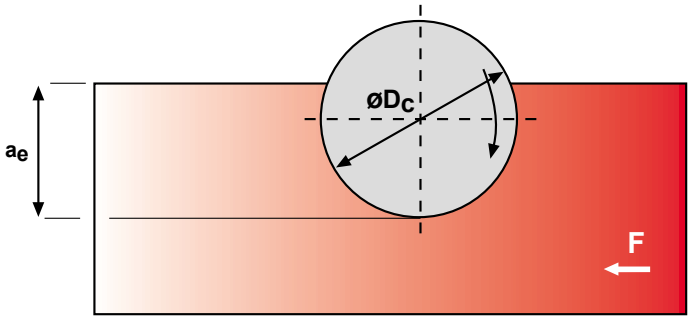

Cutter Position

Conventional Milling (Up Milling)

The feed direction of the workpiece is opposite to that of cutter rotation. The chip thickness starts at zero and increases to the maximum at the end of cut. In Up Milling, the insert wear is severe with excessive friction and high temperature caused by the rubbing or burnishing effect in the insert.

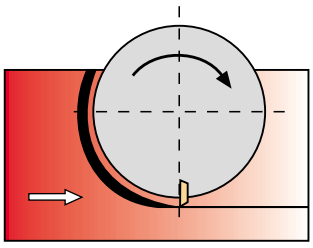

Channel Milling (Up and Down Milling)

The cutter position is in the middle of the workpiece and the cutting force is alternately changed in the radial direction. It causes vibration when the spindle structure is weak. Channel Milling is a combination of conventional and climb milling. When Channel Milling is necessary use positive geometry cutters at reduced speeds and feeds with coolant.

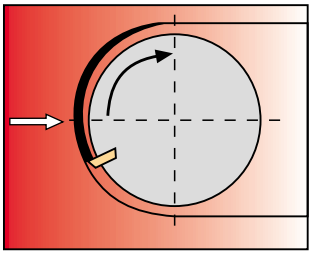

Climb Milling (Down Milling)

Climb Milling is normally recommended.
The feed direction of workpiece is the same as that of cutter rotation. So the chip thickness starts from the maximum and decreases to zero at the end of cut. The tool life is long with less heat and minimum work hardening of workpiece.

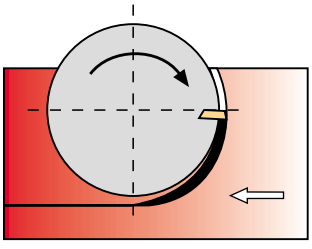

TROUBLESHOOTING

EDGE WEAR

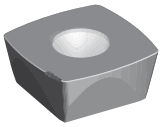

Corrective action:
- Increase feed rate
- Reduce cutting speed
- Use more wear resistant grade
- Apply coated grade

DESGASTE DA ARESTA

Possível solução:
- Aumentar o avanço
- Reduzir a Vc
- Usar grau mais resistente ao desgaste
- Aplicar grau revestido

DESGASTE DEL FLANCO

Solución posible:
- Aumentar el avance
- Reduzca la velocidad de corte
- Seleccione una calidade más resistente al desgaste
- Utilice metales duros recubiertos

HEAT DEFORMATION (UPSET)



Corrective action:
- Reduce cutting speed
- Reduce feed
- Reduce depth of cut
- Use grade with higher hot hardness

DEFORMAÇÃO ARESTA

Possível solução:
- Reduzir a Vc
- Reduzir o avanço
- Reduzir a profundidade corte
- Usar grau com maior dureza a quente

DEFORMACIÓN PLÁSTICA

Solución posible:
- Reduzca la velocidad de corte
- Seleccione una calidade más resistente al desgaste
- Reduzca el ap

THERMAL CRACKING

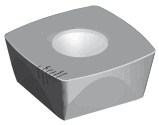

Corrective action:
- Properly apply coolant
- Reduce cutting speed
- Reduce feed
- Apply coated grade

FENDAS TÉRMICAS

Possível solução:
- Aplicação correcta do fluido de corte
- Reduzir a Vc
- Reduzir o avanço
- Aplicar grau revestido

FISSURAS TÉRMICAS

Solución posible:
- Preste atención al uso del refrigerante
- Reduzca la velocidad de corte
- Reduzca el avance
- Utilice metales duros recubiertos

CRATER

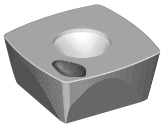

Corrective action:
- Reduce feed rate
- Reduce speed
- Apply coated grades
- Apply coolant

CRATERA FACE ATAQUE

Possível solução:
- Reduzir o avanço
- Reduzir a Vc
- Aplicar grau revestido
- Usar fluido de corte

DESGASTE DE CRÁTER

Solución posible:
- Reduzca el avance
- Reduzca la velocidad de corte
- Utilice metales duros recubiertos
- Preste atención al uso del refrigerante

CHIPPING

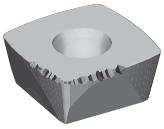

Corrective action:
- Use a stronger grade
- Consider edge preparation
- Check rigidity of system
- Increase lead angle

ESMILHAMENTO

Possível solução:
- Usar grau mais resistente
- Considerar a preparação da aresta
- Verificar a rigidez do sistema
- Aumentar o ângulo de ataque

FILOS ASTILLADOS

Solución posible:
- Seleccione una calidade más resistente al desgaste
- Utilice un inserto con una geometria de filo de corte más estable
- Modifique el ángulo de posicion
- Modifique la geometria de rompevirutas

DEPTH-OF-CUT NOTCHING

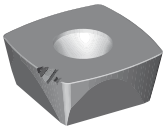

Corrective action:
- Change lead angle
- Consider edge preparation
- Apply different grade
- Adjust feed

FRACTURA

Possível solução:
- Alterar o ângulo de ataque
- Considerar a preparação da aresta
- Aplicar outro grau
- Ajustar o avanço

DESGASTE POR ENTALLA

Solución posible:
- Escoja un ángulo de posición mas pequeño
- Ajuste el avance
- Cambie de calidad
- Utilice un inserto con una geometria de filo de corte más estable

BUILT-UP EDGE

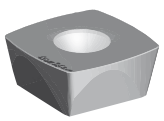

Corrective action:
- Increase cutting speed
- Increase feed rate
- Apply PVD coated grades
- Use coolant
- Edge preparation (smaller hone)

ARESTA POSTIÇA CORTE

Possível solução:
- Aumentar a Vc
- Aumentar o avanço
- Aplicar grau revestido
- Usar fluido de corte
- Reduzir boleamento

FILOS RECRECIDOS

Solución posible:
- Aumentar la velocidad de corte
- Aumentar el avance
- Utilice metales duros recubiertos
- Aplique refrigerante con mayor concentración de aceite
- Seleccione una geometría de corte positiva

CATASTROPHIC BREAKAGE

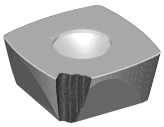

Corrective action:
- Utilize stronger grade / geometry
- Reduce feed rate
- Reduce depth of cut
- Check rigidity of system
- Examine edge prep / nose radius

FRACTURA CATASTRÓFICA

Possível solução:
- Aplicar grau / geometria mais resistente
- Reduzir o avanço
- Reduzir a profundidade de corte
- Aplicar grau revestido
- Usar fluido de corte

ROTURA DE INSERTO

Solución posible:
- Seleccione un material más tenaz
- Utilice insertos más robustos con ángulos de arista más grandes
- Selecione una geometria de rompe virutas para secciones de corte más amplias
- Reduzca en avance

PROBLEMS | PROBLEMAS | PROBLEMAS		Possible causes and areas of investigation Causas possíveis e áreas de intervenção Possibles causas y las áreas de intervención	cutting speed | velocidade de corte | velocidad corte	feed | avanço | avance	depth-of-cut | profundidade de corte | profundidad de corte	grade | grau da pastilha | calidad inserto	coolant | óleo de corte | refrigerante	rake angle | ângulo de ataque | ángulo de posición	edge preparation | preparação da aresta | preparación del filo	material (type / condition) | material (tipo / condições) | material	center height | altura do centro | altura al centro	geometry (insert) | geometria da pastilha | geometría del inserto	insert finish | acabamento na pastilha | acabado del inserto	insert thickness | espessura da pastilha | espessura inserto	nose radius | raio de canto | radio punta	lead angle | ângulo da aresta de ataque | ángulo filo corte	holder (type / condition) | suporte (tipo / condições) | soporte (condiciónes)	machine condition | estado do equipamento - torno | condición de maquina	chip flow direction | direcção de fluxo da apara | dirección de la viruta	horsepower | potência | fuerza	excessive overhang | excessivo comprimento livre da ferramenta | sobreendeudamiento excessivo	spindle bearings | rolamentos do eixo | cojinetes del husillo	turret | torreta | torreta	machine anchored | fundações da máquina | anclada de la maquina	workholding | fixação da peça | sujeción pieza	rigidity | rigidez | estabilidad	chatter | vibração | vibraciones
	• UNACCEPTABLE CHIPS • APARA DESADEQUADA • VIRUTA INACEPTABLE	• stringer / ribbons (light silver colo) • demasiado longas (cor de prata suave) • mucho larga (color plata suave)	P↑	P↑	◎		◎	◎	◎	◎			P			◎	◎				◎									
		• scorrugated / tight (dark blue or black color) • ondulado / firme (cor azul escuro ou preto) • corrugado / firme (azul / negra)	◎	P↓	◎	◎	◎	◎	◎	◎	◎		P			◎	◎													
	• WORKEPIECE CONCERNS • MATERIAL • MATERIAL	• finish / rms tolerance • tolerância e rugosidades • tolerancia y rugosidades	P	P	◎	◎	◎	◎	◎	◎	◎	◎		◎		P			◎	◎										
		• interrupted cuts • corte interrompido • corte interrumpido	P↑	P↓	P↓	◎		◎	◎	◎		◎		◎	◎	◎	▲		◎		◎	◎	◎			◎	◎	◎		
	• MACHINE CONCERNS • MÁQUINA FERRAMENTA • MAQUINA HERRAMIENTA	• areas of investigation • áreas de intervenção • áreas de intervención	◎	◎	◎	◎	◎					◎							◎		◎	◎	◎	◎	◎	◎	P			
	• INSERTS FAILURE MODES • MODOS DE RUPTURA DA PASTILHA • MODOS DE RUPTURA DE INSERTO	• edge wear • desgaste da aresta • desgaste de flanco	P	P	◎	P	◎					◎																		
		• heat deformation (upset) • deformação plástica • deformación plástic	P↓	P↓	P↓	◎	◎	◎							◎	◎														
		• thermal cracking • fendas térmicas • fissuras térmicas	◎	◎	◎	P	P	◎							◎															
		• crater • cratera na face de ataque • cráter en la pared de ataque	P↓	P↓		◎	◎	◎					◎								◎									
		• chipping • esmilhamento • filos astillados	◎	◎		P	◎	◎	P	◎	◎	◎		◎	◎	◎	◎	◎	◎								◎	◎	◎	
		• depth-of-cut notching • fractura • desgaste por entalla	◎	◎		◎		◎	◎	P				◎	P												◎	◎	◎	
		• built-up edge • aresta postiça de corte • filos recrescidos	P↑	P↑		PVD	◎	◎	P	P	◎	◎	◎																	
		• catastrophic breakage • fractura catastrófica • rotura de inserto	◎	◎	◎	◎	◎	◎	◎	◎		◎		◎	◎	◎	◎	◎	◎			◎					◎	P	P	

↑↓ *Arrows indicate direction of adjustment | As setas indicam a direcção do ajustamento | Las flechas indican la dirección de ajuste*

P *Indicate areas of primary investigation | Indica as áreas de primeira intervenção | Indica las áreas de intervención primaria*